DAAC - SCF Interface Confidence Test, ICT1

The ECS - SCF ICD identifies distinct data flows supported by ECS Release B. However, almost all of these data flows reduce to file transfers between DAAC and SCF hosts with the applications layer processing being done manually. All data flows are carried by one of the following seven interface mechanisms: e-mail via SMTP, password protected FTP, Kerberos FTP, hard media transfer, WWW access, ECS client data retrieval, and the ECS Data Server Ingest GUI.

Test Objectives:

This test verifies:

- The ability of the SCF and DAAC elements to transfer and respond to all message data types.
- Proper implementation of bulk data transfers.
- Error and exception handling for ftp and kftp transfers.

The following ECS DAAC to SCF interfaces are tested for EGS Version 2:

AM-1 Mission

GSFC DAAC - MODIS SCF
LaRC DAAC - MISR SCF
LaRC DAAC - MOPITT SCF
EDC DAAC - ASTER SCF
EDC DAAC - MODIS SCF

TRMM Mission

LaRC DAAC - CERES SCF

Test Configuration:

Hardware and software configurations at each ECS site are managed and tracked by the M&O organization at that site. The most current configuration status report will be obtained prior to the start of testing and referenced in the test report.

The GSFC and LaRC DAACs are similarly configured as shown in EXHIBIT 2 below. The connections to the SCFs are made via Internet Protocols via the EBnet router and the NASA Science Internet (NSI) network.

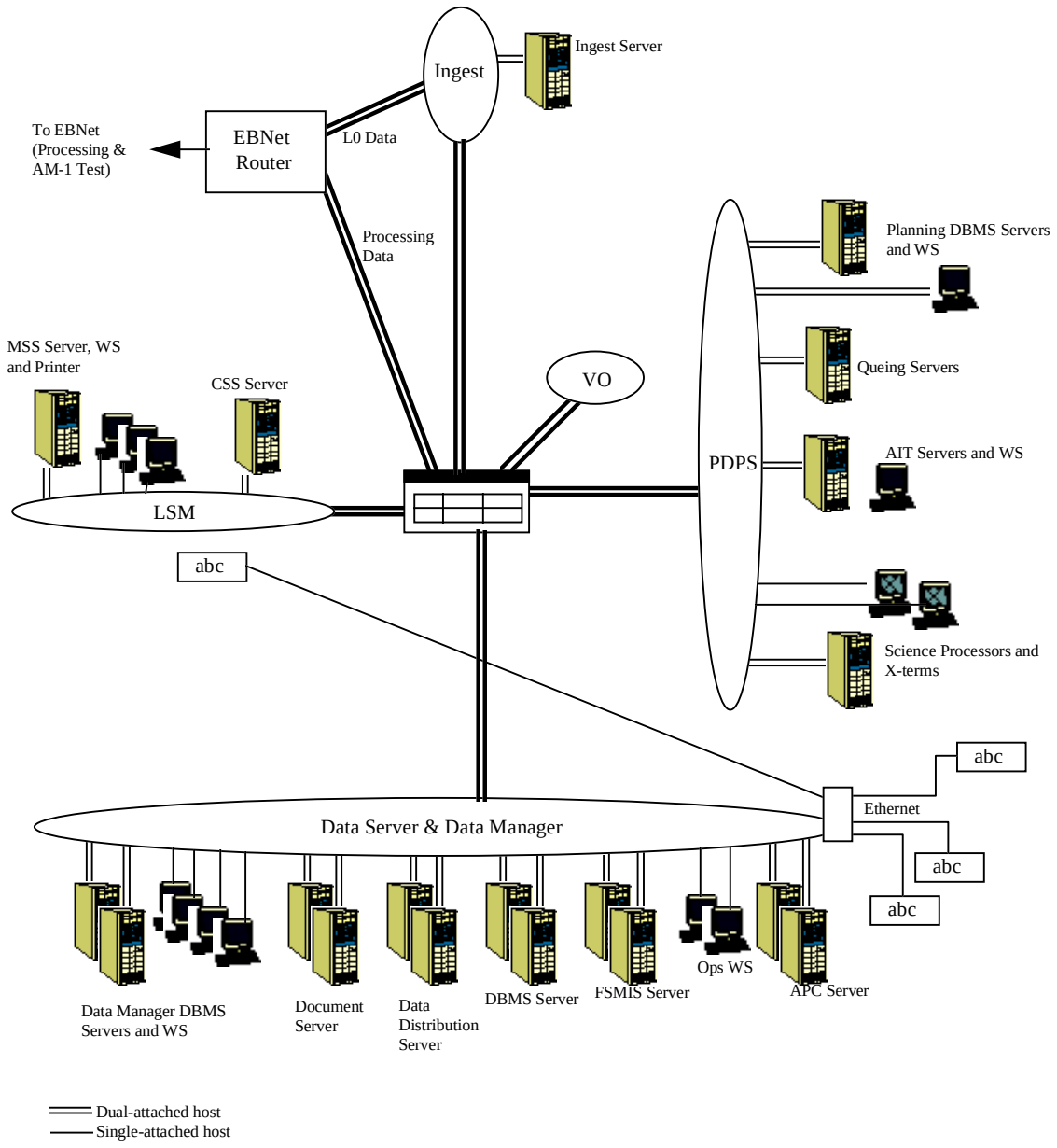

EXHIBIT 1: GSFC / LaRC DAAC Configuration

The EDC DAAC configuration is shown in EXHIBIT 3 below. ECS elements at the EDC are connected to an Ethernet Hub, which in turn gains access to the EBnet router via the V0 LAN at EDC. As at the other DAACs, connections to the SCFs are made via Internet Protocols via the EBnet router and the NASA Science Internet (NSI) network.

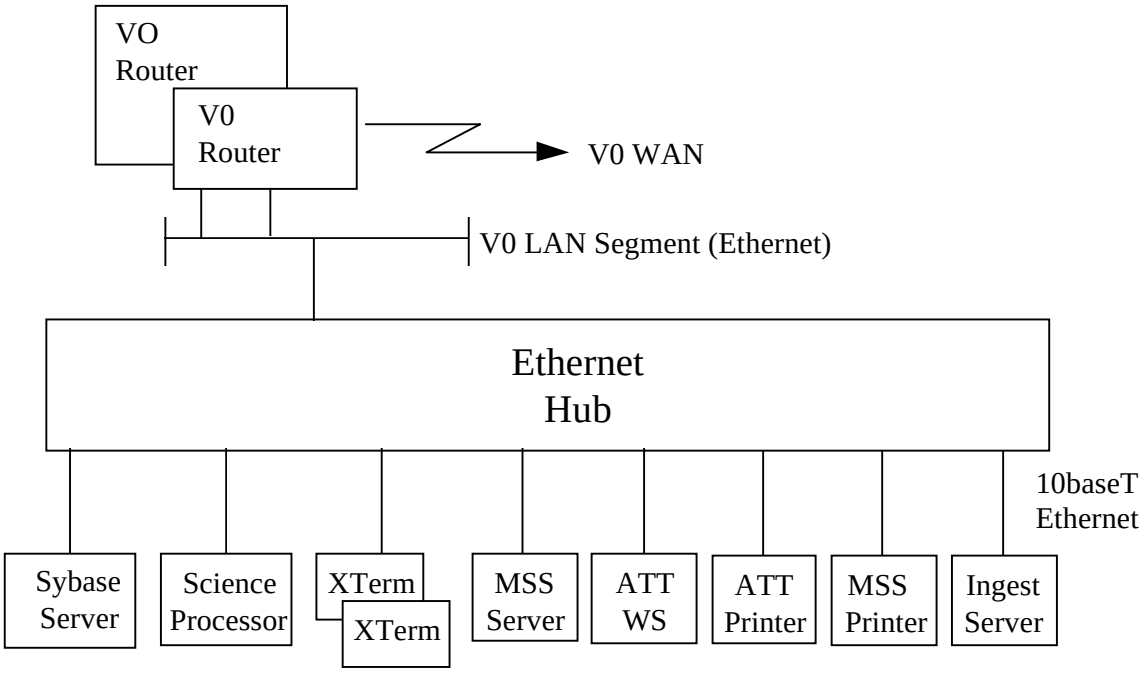

EXHIBIT 2: EDC DAAC Configuration

Participant and Support Requirements:

Participants: Maintenance & Operations (M&O) personnel at GSFC, EDC, and LaRC DAAC

LIS, CERES, MODIS, MOPITT, MISR SCF operations personnel

I&T

Communications:

Voice:

TBD

Data:

NASA Science Internet (NSI)

IP addresses: **TBS**

Equipment and Software:

SCF Operator Workstation

DAAC Operator AIT Workstation

ECS Management Subsystem Server

Test Tools:

TBD

Test Data:

Description / Characteristics	Source
e-mail test message (ICT1.01)	Keyboard
ECS software test package (ICT1.02)	ECS
I&T Requirements (Dummy text) (ICT1.03)	Keyboard
Utility file for kftp transfer (ICT1.04)	Any file

Science Data Production Packages (ICT1.05) Full package configured in accordance with instructions to science users.	Instrument Teams CERES MODIS MOPITT ASTER MISR
Operational Science Data Production Software Packages (ICT1.06) Operational algorithms for transfer back to instrument teams at SCF	Instrument Teams CERES MODIS MOPITT ASTER MISR
Coefficient and Ancillary Data files (ICT1.09) Files for updating.	Instrument Teams CERES MODIS MOPITT ASTER MISR

Functional Thread Test Case

Thread ID: V2.0-ICT-01 **Modified:** 12/10/96 **Description:** DAAC - SCF Interface Confidence Test

This test verifies:
· The ability of the SCF and DAAC elements to transfer and respond to all message data types.
· Proper implementation of bulk data transfers.
· Error and exception handling for ftp and kftp transfers.

Test Case ID: V2.0-ICT-01.01 **Modified:** 2/12/97 **Description:** This test verifies that the SCFs can exchange e-mail messages with their respective DAACs. This satisfies the requirement to support the free form e-mail data flows identified in EXHIBIT 1. The SCF will post a generic test message to the DAAC operations account and receive a reply.

Objectives:

Configuration:

Verified Requirements:
SCF-0080#A
SCF-0110#A
SCF-0200#A
SCF-0210#A
SCF-0260#A
SCF-0270#A

Data Inputs:

Methods for Results Analysis:

Assumptions/Constraints:

Step ID	Test Station	Operator Actions/ Equipment Operation:	Expected Results / Evaluation Criteria:	Comments	Verified Reqs:	Last Modified:
1.001		TBS				2/12/97

Actions Required after Program Stop/Indicated Error:

Procedures for Reducing/Analyzing Results:

Functional Thread Test Case

Thread ID: V2.0-ICT-01 **Modified:** 12/10/96 **Description:** DAAC - SCF Interface Confidence Test

This test verifies:
· The ability of the SCF and DAAC elements to transfer and respond to all message data types.
· Proper implementation of bulk data transfers.
· Error and exception handling for ftp and kftp transfers.

Test Case ID: V2.0-ICT-01.02 **Modified:** 2/12/97 **Description:** This test verifies that the SCF can pull files from the DAAC via private FTP transfer. The SCF will remotely log in to the DAAC FTP account with a valid user id and password and pull a generic file representing an ECS software package to the SCF.

Objectives:

Configuration:

Verified Requirements:
SCF-0060#A

Data Inputs:

Methods for Results Analysis:

Assumptions/Constraints:

Step ID	Test Station	Operator Actions/ Equipment Operation:	Expected Results / Evaluation Criteria:	Comments	Verified Reqs:	Last Modified:
1.001		TBS				2/12/97

Actions Required after Program Stop/Indicated Error:

Procedures for Reducing/Analyzing Results:

Functional Thread Test Case

Thread ID: V2.0-ICT-01 **Modified:** 12/10/96 **Description:** DAAC - SCF Interface Confidence Test

This test verifies:
· The ability of the SCF and DAAC elements to transfer and respond to all message data types.
· Proper implementation of bulk data transfers.
· Error and exception handling for ftp and kftp transfers.

Test Case ID: V2.0-ICT-01.03 **Modified:** 2/12/97 **Description:** This test verifies that the SCF can locate and download integration and test requirements from the EDHS at the EDF. The SCF will log on to the EDHS server via the web browser, locate the I&T requirements and download them.

Objectives:

Configuration:

Verified Requirements:
SCF-0070#A

Data Inputs:

Methods for Results Analysis:

Assumptions/Constraints:

Step ID	Test Station	Operator Actions/ Equipment Operation:	Expected Results / Evaluation Criteria:	Comments	Verified Reqs:	Last Modified:
1.001		TBS				2/12/97

Actions Required after Program Stop/Indicated Error:

Procedures for Reducing/Analyzing Results:

Functional Thread Test Case

Thread ID: V2.0-ICT-01 **Modified:** 12/10/96 **Description:** DAAC - SCF Interface Confidence Test

This test verifies:
· The ability of the SCF and DAAC elements to transfer and respond to all message data types.
· Proper implementation of bulk data transfers.
· Error and exception handling for ftp and kftp transfers.

Test Case ID: V2.0-ICT-01.04 **Modified:** 2/12/97 **Description:** This test verifies that both sides of the ECS - SCF interface can conduct both "push" and "pull" file transfers via the kftp server. Each side in turn will authenticate to Kerberos and conduct a secure "put" and "get" file transfer operation. This verifies the ability to support utility kftp data flows such as: science software I&T status, data production software delivery package via network, operational science data production software package via network, test products, data delivered for QA, processing status, resource usage, product history, coefficients and SCF generated ancillary data, coefficient and ancillary data update network ingest.

Objectives:

Configuration:

Verified Requirements:
SCF-0100#A
SCF-0230#A
SCF-0350#A
SCF-0370#A
SCF-0390#A

Data Inputs:

Methods for Results Analysis:

Assumptions/Constraints:

Step ID	Test Station	Operator Actions/ Equipment Operation:	Expected Results / Evaluation Criteria:	Comments	Verified Reqs:	Last Modified:
1.001		TBS				2/12/97

Actions Required after Program Stop/Indicated Error:

Procedures for Reducing/Analyzing Results:

Functional Thread Test Case

Thread ID: V2.0-ICT-01 **Modified:** 12/10/96 **Description:** DAAC - SCF Interface Confidence Test

This test verifies:
· The ability of the SCF and DAAC elements to transfer and respond to all message data types.
· Proper implementation of bulk data transfers.
· Error and exception handling for ftp and kftp transfers.

Test Case ID: V2.0-ICT-01.05 **Modified:** 1/9/97 **Description:** This test verifies that the DAAC can ingest algorithm packages from the SCFs. SCF will use the HTML Ingest GUI via a WWW browser to request ingest of an algorithm package. The SCF will place a Delivery Record of the contents of the package in a designated directory and the package itself in a different "push" directory.

Objectives:

Configuration:

Verified Requirements:
SCF-0090#A
SCF-0120#A

Data Inputs:

Methods for Results Analysis:

Assumptions/Constraints:

Step ID	Test Station	Operator Actions/ Equipment Operation:	Expected Results / Evaluation Criteria:	Comments	Verified Reqs:	Last Modified:
1.001	ECS, SCF	Login as operator.	Entry into respective environments.			
1.002	ECS	Launch Ingest processes and Ingest Monitor GUI.	Ingest Monitor display appears.			
1.003	SCF	Launch script capture.				
1.004	SCF	Place DR, in designated directory. List contents of this directory.	Listing shows DR.			
1.005	SCF	Place algorithm package, in the form of a tar file, in designated directory. List contents of this directory.	Listing shows operational algorithm package.			
2.001	SCF	Launch WWW browser. Go to the ECS Ingest page.	Ingest display appears.			
2.002	SCF	Complete form and submit.	DAAC Ingest Monitor shows receipt of valid DR and ingest of algorithm package.			

Step ID	Test Station	Operator Actions/ Equipment O	Expected Results / Evaluation	Comments	Verified Reqs:	Last Modified:
2.003	ECS	Verify Ingest completion in the History Log via the History GUI.	Log shows successful completion.			
2.004	ECS	Verify insertion of the package into the archive by viewing the Data Server MSS Event Log.	Log shows successful archive process.			
2.005	ECS	Verify insertion of the package into the archive by querying the database.	Query shows algorithm package among holdings.	Query must be done on an SGI.		
3.001	SCF	Close WWW browser.				
3.002	ECS	Close Ingest GUI, Log GUIs and exit from Ingest processes.				
3.003	SCF, ECS	Logout.				

Actions Required after Program Stop/Indicated Error:

Procedures for Reducing/Analyzing Results:

Functional Thread Test Case

Thread ID: V2.0-ICT-01 **Modified:** 12/10/96 **Description:** DAAC - SCF Interface Confidence Test

This test verifies:
· The ability of the SCF and DAAC elements to transfer and respond to all message data types.
· Proper implementation of bulk data transfers.
· Error and exception handling for ftp and kftp transfers.

Test Case ID: V2.0-ICT-01.06 **Modified:** 1/9/97 **Description:** This test verifies that the SCF can "pull" copies of the operational algorithm packages from the DAAC to the SCF. The SCF will make a request for a package via WWW interface. When the package is ready, DAAC operations will post an e-mail DAN telling SCF operations where to pick up the package. SCF operations will conduct a kftp pull of the package files.

Objectives:

Configuration:

Verified Requirements:
SCF-0090#A
SCF-0120#A

Data Inputs:

Methods for Results Analysis:

Assumptions/Constraints:

Step ID	Test Station	Operator Actions/ Equipment Operation:	Expected Results / Evaluation Criteria:	Comments	Verified Reqs:	Last Modified:
1.001	ECS, SCF	Login as operator.	Entry into respective environments.			
1.002	SCF	Launch script capture.				
1.003	ECS	Place operational algorithm package in designated directory. List contents of this directory.	Listing shows operational algorithm package.			
1.004	SCF	Launch Internet browser.				
2.001	SCF	Go to EDHS web site.	Entry into EDHS web site.			
2.002	SCF	Select Operational Data Production Software Package Request Form.	Form is displayed.			
2.003	SCF	Complete Form and submit.	Submission completed. ECS receives form.			
2.004	ECS	Confirm receipt of form.	Form received.			
2.005	SCF	Close Internet browser.				

Step ID	Test Station	Operator Actions/ Equipment O	Expected Results / Evaluation	Comments	Verified Reqs:	Last Modified:
2.006	ECS	ECS automatically returns DAN notifying SCF of data availability and location. SCF receives DAN.	SCF receives form.			
2.007	SCF	Parse DAN to determine location, filename and size of files.	DAN contains location, filename and size of files.			
2.008	SCF	Use kFTP to login to designated location.	Successful entry.			
2.009	SCF	List contents of directory.	Listing shows operational algorithm package.			
2.010	SCF	Execute FTP "get" operation to pull file specified in the DAN.	FTP confirmation of transfer.			
2.011	SCF	List contents of local destination directory.	Listing shows operational algorithm package.			
3.001	SCF	Close kFTP connection.				
3.002	SCF	Compare data file against original test data.	Data file and test data are identical.			
3.003	ECS, SCF	Logout.				

Actions Required after Program Stop/Indicated Error:

Procedures for Reducing/Analyzing Results:

Functional Thread Test Case

Thread ID: V2.0-ICT-01 **Modified:** 12/10/96 **Description:** DAAC - SCF Interface Confidence Test

This test verifies:
· The ability of the SCF and DAAC elements to transfer and respond to all message data types.
· Proper implementation of bulk data transfers.
· Error and exception handling for ftp and kftp transfers.

Test Case ID: V2.0-ICT-01.07 **Modified:** 2/12/97 **Description:** N.B. Much of the Release A Client data retrieval interfaces have been changed to a combination of WWW forms and kFTP transfers. Consequently this test is currently under entire re-examination. This test verifies that the Release A Client can access and retrieve files necessary to conduct Science Software Integration and Test, Data QA, obtain processing status, resource usage, and product history information. The SCF operator will log on to the DAAC via the Release A Client, locate the required information through the client browser and download it to the SCF.

Objectives:

Configuration:

Verified Requirements:
SCF-0340#A
SCF-0360#A
SCF-0380#A

Data Inputs:

Methods for Results Analysis:

Assumptions/Constraints:

Step ID	Test Station	Operator Actions/ Equipment Operation:	Expected Results / Evaluation Criteria:	Comments	Verified Reqs:	Last Modified:
1.001		TBS				2/12/97

Actions Required after Program Stop/Indicated Error:

Procedures for Reducing/Analyzing Results:

Functional Thread Test Case

Thread ID: V2.0-ICT-01 **Modified:** 12/10/96 **Description:** DAAC - SCF Interface Confidence Test

This test verifies:
· The ability of the SCF and DAAC elements to transfer and respond to all message data types.
· Proper implementation of bulk data transfers.
· Error and exception handling for ftp and kftp transfers.

Test Case ID: V2.0-ICT-01.08 **Modified:** 2/12/97 **Description:** This test verifies that the SCFs can locate and update metadata for SCF provided science data products.

The SCF will locate and updates the metadata by using a WWW form that is accessible via WWW browser. The metadata will be queried locally at the DAAC before and after the update to verify the change.

Objectives:

Configuration:

Verified Requirements:
SCF-0240#A
SCF-0250#A

Data Inputs:

Methods for Results Analysis:

Assumptions/Constraints:

Step ID	Test Station	Operator Actions/ Equipment Operation:	Expected Results / Evaluation Criteria:	Comments	Verified Reqs:	Last Modified:
1.001		TBS				2/12/97

Actions Required after Program Stop/Indicated Error:

Procedures for Reducing/Analyzing Results:

Functional Thread Test Case

Thread ID: V2.0-ICT-01 **Modified:** 12/10/96 **Description:** DAAC - SCF Interface Confidence Test

This test verifies:
· The ability of the SCF and DAAC elements to transfer and respond to all message data types.
· Proper implementation of bulk data transfers.
· Error and exception handling for ftp and kftp transfers.

Test Case ID: V2.0-ICT-01.09 **Modified:** 1/9/97 **Description:** This test verifies that the SCF can provide updates processing coefficients and other ancillary data to the DAACs. The SCF will identify for update coefficients and ancillary data sets via the Release A client. ECS will notify the SCF of coefficient and ancillary data availability via an e-mail DAN. ECS will identify and retrieve updated coefficients and ancillary data from the SCF via the Ingest GUI operating a kftp pull transfer.

Objectives:

Configuration:

Verified Requirements:
SCF-0310#A
SCF-0320#A
SCF-0330#A

Data Inputs:

Methods for Results Analysis:

Assumptions/Constraints:

Step ID	Test Station	Operator Actions/ Equipment Operation:	Expected Results / Evaluation Criteria:	Comments	Verified Reqs:	Last Modified:
1.001		TBS				2/12/97

Actions Required after Program Stop/Indicated Error:

Procedures for Reducing/Analyzing Results: