Telemetry Analysis Confidence Test - EOC4

The Spacecraft (S/C) Analysis Service provides the capabilities needed for management of the on-board systems and for overall mission monitoring. It allows the EOC operators to monitor and manage the S/C system configurations and resources; perform real-time (R/T) and off-line analyses of S/C bus and instrument data to track performance and trends, and detect and isolate anomalies. These analysis functions are provided on a non-interference basis with R/T telemetry processing functions. Only a subset of the analysis functions is provided in real time through the use of a FOS User Interface (FUI) Quick Analysis and SSR Analysis tools.

The Analysis Service evaluates the performance of the S/C subsystems and the status of instruments. Performance data are processed from spacecraft recorder and R/T housekeeping, and historical telemetry. The historical telemetry is retrieved from either short-term (FOS DMS) or long-term storage (SDPS). The EOC reports on the quality of the data used for the analysis, reports failures detected, and identifies marginal system operation. The EOC enables operators to analyze the performance of the power, command and data handling, thermal, communications, and guidance navigation and control subsystems.

Test Objectives:

The objectives of the test are:

- Verify that the EOC can receive, process, and analyze S/C bus and instrument data to track performance and trends, and detect and isolate anomalies off-line.
- Verify that user-defined statistics (min-max-mean and standard deviation) for a specified time interval can be generated for a selected set of telemetry parameters.
- Verify the storage and retrieval of analysis products from the local EOC archive (short-term storage).

Test Configuration:

Hardware and software configurations at each ECS site are managed and tracked by the M&O organization at that site. The configuration that is tested against will be provided in the test report.

(See Exhibit EOC4-1.1)

Participants and Support Requirements:

Participants:

FOT, I&T Conductor

Communications:

Voice - SCAMA and CCL circuits **TBS-1**

IP addresses: **TBS-2**

Equipment and Software:

EOC workstations (ftp, Kerberos)

Servers: Data Server, Real-time Server, Multicast Server
Data Storage Unit (File Servers, RAID Units)
Printers: Color, Laser, Line
FOS Analysis Subsystem
FOS Telemetry Subsystem
FOS User Interface Subsystem
FOS Data Management Subsystem
FOS Resource Management System

Test Prerequisites:

Dynamic pages containing alphanumerics, tables, graphs, and “NODATA” and “STATIC” flag indicators (use the Display Builder); rooms (use the Room Builder); tables containing predetermined telemetry parameter values to be compared with resulting decommutated and EU converted values; and ETS scenario script files.

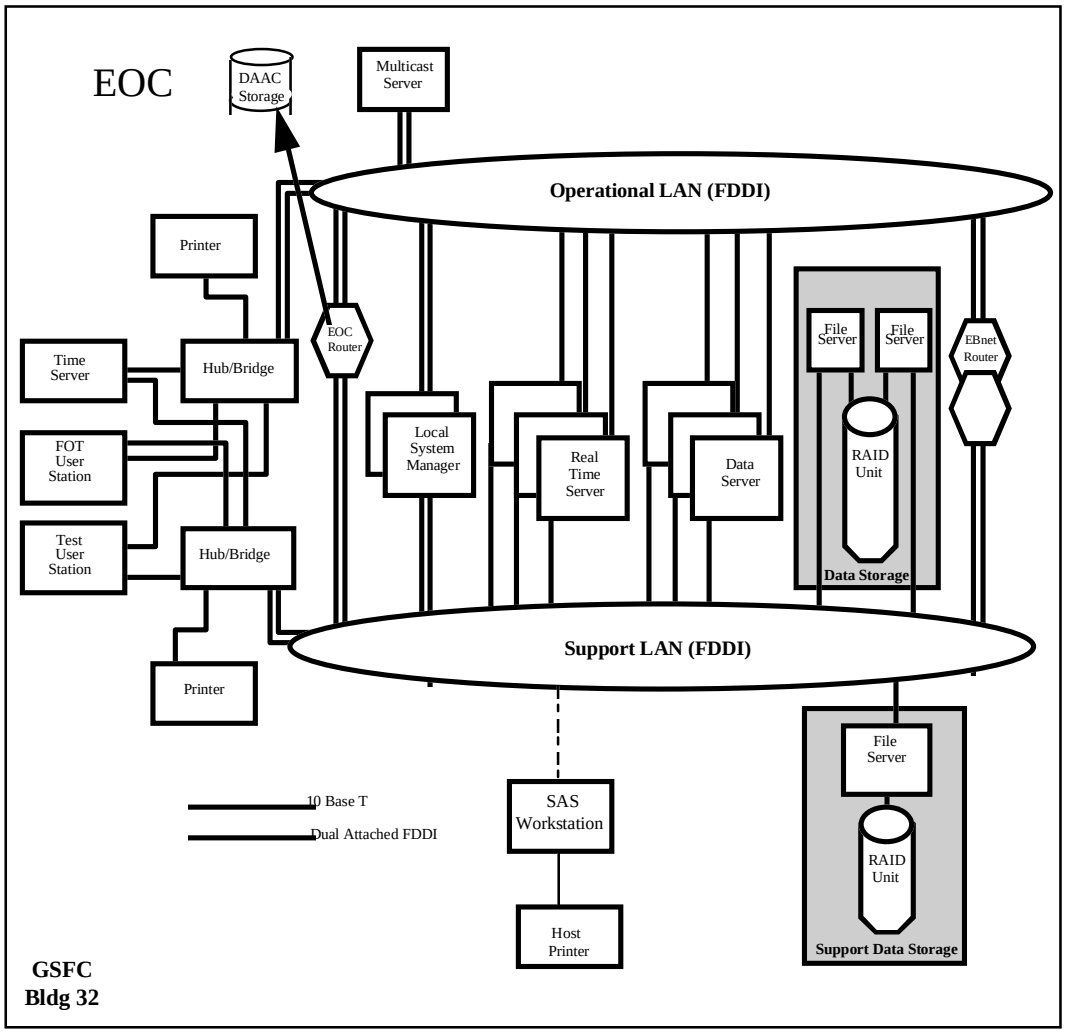

EBnet

No Physical Connection

EXHIBIT EOC4-1.1: Telemetry Analysis using only the EOC

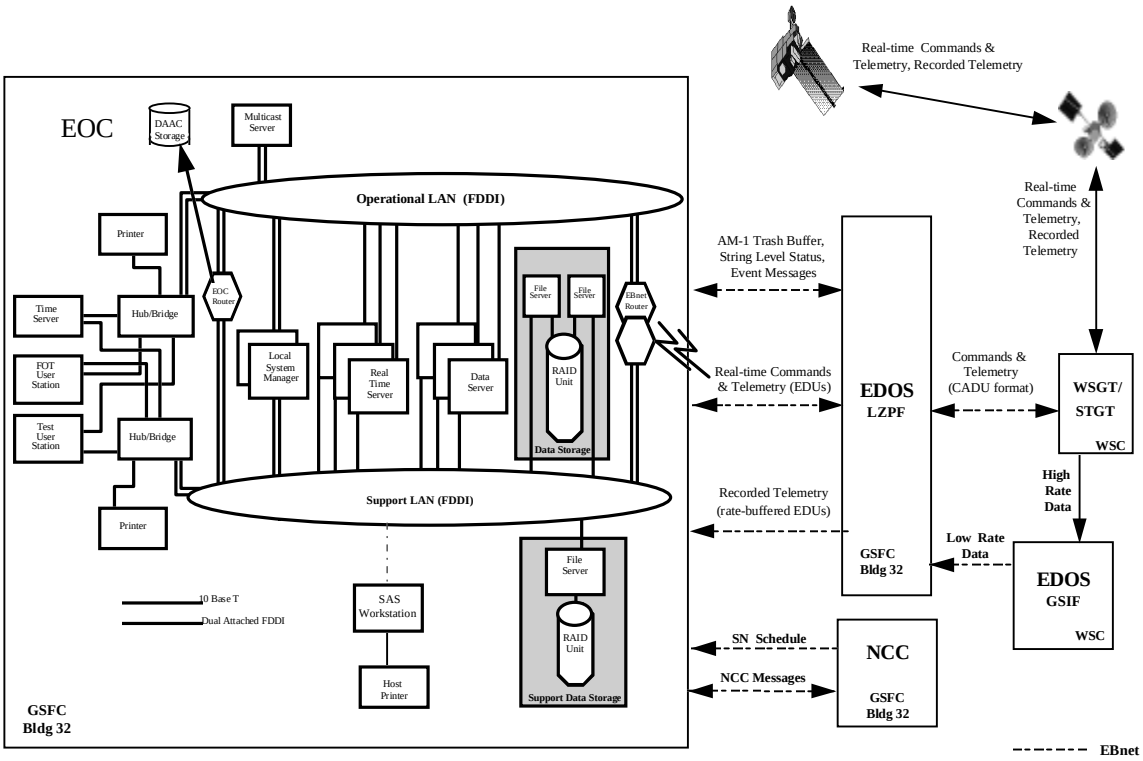

EXHIBIT EOC4-1.2: Telemetry Analysis using RFSOC & ETS MPS

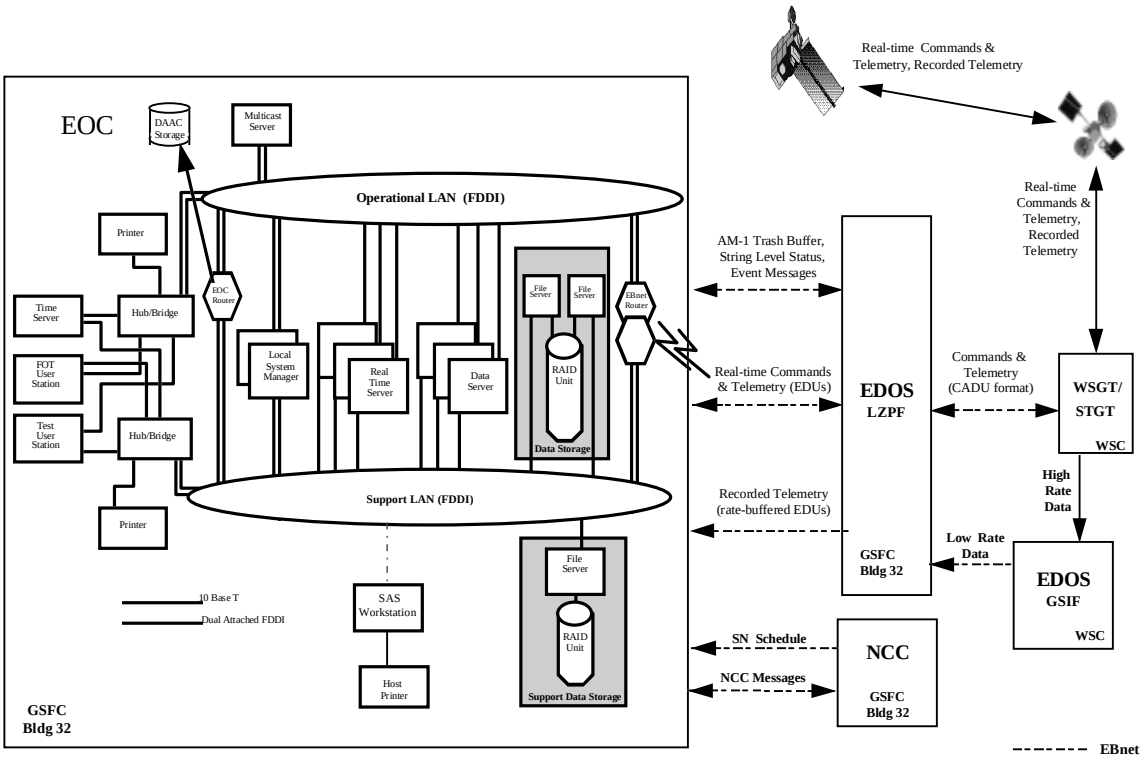

EXHIBIT EOC4-1.3: Telemetry Analysis using TDRSS and AM-1 S/C

Test Data:

Description / Characteristics	Source	File/script name and physical location
AM-1 real-time data in CCSDS telemetry (TLM) packets in the form of Path Service EDUs (one of each TLM value bit size - 1, 8, 16, 32, 48; representative set of both discrete and analog parameters): • S/C bus and instrument H/K telemetry data (16 kbps, APID = 1, VCID = 1)	FOS DMS **EOC1 Test Data**	**rt_hk.scn**
AM-1 real-time data in CCSDS telemetry (TLM) packets in the form of Path Service EDUs (one of each TLM value bit size - 1, 8, 16, 32, 48): • S/C bus and instrument H/K telemetry data (16 kbps, APID = 1, VCID = 1) with red & yellow high/low, and delta limit violations S/C bus H&S telemetry data (1 kbps, APID = 2, VCID = 2) with red & yellow high/low, and delta limit violations	ETS, SSIM, AM-1 S/C, FOS DMS, or SDPS **EOC1 Test Data**	**eulimhk.scn** **eulimhs.scn** **deltalim.scn**
AM-1 real-time data in CCSDS telemetry packets in the form of Path Service EDUs (containing at a minimum: one of each telemetry sample type - current, voltage, temperature, power; one of each of the telemetry point source type - real or raw data, flight software generated data, pseudo or derived data, passive analog, and active analog; one of each possible APID/VCID combination; one of each EU conversion type - line segment [up to 15 line segments - 1, 2, 5, 8, 11, 14, 15]; polynomial [1st, 2nd, 3rd, 4th, 5th, 6th, and 7th order]); exponential.	ETS, SSIM, AM-1 S/C, FOS DMS, or SDPS **EOC1 Test Data**	**eulimhk.scn** **eulimhs.scn**

EOC4.4 Analysis Requests and User-Defined Statistics Generation

This test verifies that the EOC can create and fulfill telemetry analysis requests, generate user-defined statistics, and apply pre-defined algorithms to received telemetry. This algorithm feature is a Release B capability. [24]

- Analysis requests are submitted through the Analysis Request Builder for a selected set of historical telemetry data. The analysis requests specify the request processing site (local only or EOC only); data quality (all data, good data only); telemetry parameters; time periods; sampling rate (all data, changes only data, and data every Nth sample up to 32767); user-defined statistics; and/or algorithms required to generate analysis products. All sampling rates are exercised for various combinations of good and bad data. Each type of analysis product

output view (telemetry attributes, graph, and table) is exercised. The format option is used to customize each type of output view. The remaining product options (output dataset, input dataset, and carry-out file) are also exercised. Plotting data contained within a dataset and the creation of reports that contain plots and tables are Release B capabilities.

- User-defined statistics (min-max-mean and standard deviation) for a specified time interval (between one second and 24 hours) are generated for a selected set of telemetry parameters. The resulting statistical datasets are archived and are retrieved for display via the FUI and/or report generation.

Verified Requirements:
EOC-6010#A
EOC-6050#A
EOC-6070#A
EOC-6100#A
EOC-7060#A
EOC-7120#A

Procedures:

Step ID	Station	Actions	Results	Comments	Verified Reqs.	Last Modified
1.001	EOC	Initialize the FOS EOC hardware. Refer to the FOS Operations Tool Manual for the ECS Project, Section 4.1.1, Hardware Initialization.	FOS EOC hardware: DEC RAID (no name), RAID Server (foseoc2), Data Server (foseoc7), Real-Time Server (foseoc6), and EOC User Stations (HP and Sun) are up and running.	RAID contains the users' home directories and the operational FOS software in /fos, which needs to be mounted by the other machines.The FOS EOC hardware is already initialized so this step is not performed - step skipped.		4/21/97
1.002	ETS (MPS)	Initialize the ETS MPS hardware (Power On).	ETS MPS hardware is up and running.	The ETS MPS hardware is already initialized so this step is not performed - step skipped.Release A: This step is not required.Release B: This step is required.		4/21/97
1.003	EDOS	Initialize the EDOS hardware.	EDOS hardware is up and running.	Release A: This step is not required.Release B: This step is required.		4/21/97
1.004	ETS(MPS)X-terminal	If the ets2 login window is not up, restart the server and select ets2.Login to the ETS X-terminal (UNIX OS). account: si_t <Return> password: [password] <Return>Bring-up the MPS Graphical User Interface (GUI).Type	The MPS Menu Controller appears with MPS and OMDSIM buttons.	Home directory: /usr/si_t/MPS executable directory: /usr/si_t/release/binRelease A: This step is not required.Release B: This step is required.		4/21/97

Step ID	Station	Actions	Results	Comments	Verified Reqs.	Last Modified
		ets_mps <Return>				
1.005	ETS (MPS)X-terminal	Select MPS Exec from the MPS Menu Controller Window.	The MPS main window appears	Release A: This step is not required.Release B: This step is required.		4/21/97
1.006	ETS(MPS)PDOS terminal	Reset the MVME177 card and bring-up the MPS software.Press the reset button for the MVME177 card.Login to the ETS PDOS terminal.Change to the directory where the MPS startup script resides.Option 1: Type gotosi (alias cd 10:/si_t/release1)Option 2: Type cd /ets/devType RUNACPT.	The following message is shown at the bottom of the PDOS terminal: TY_main ... waiting for messageA MPS ready message is shown in the event log window of the MPS main window.	The MVME 177 card and the PDOS terminal are in the back room.Use Option 2.Release A: This step is not required.Release B: This step is required.		4/21/97
1.007	ETS(MPS)X-terminal	Select S/C simulation mode for MPS.Select the Spacecraft radio button for Simulation Mode from the MPS main window.	The Spacecraft radio button is sensitized.	Release A: This step is not required.Release B: This step is required.		4/21/97
1.008	ETS(MPS)X-terminal	Select the PDB as the data source for the telemetry being generated by the MPS.Select the PDB radio button under Data Source from the MPS main window.	The PDB radio button is sensitized.	Release A: This step is not required.Release B: This step is required.		4/21/97
1.009	ETS(MPS	Set and record the S/C and	The Spacecraft Time and	Use the following Unix		4/21/97

Step ID	Station	Actions	Results	Comments	Verified Reqs.	Last Modified
	)X-terminal	UTC times to the GMT time provided at the EOC.Select Set Time from the Control pull-down menu in MPS main window and enter the GMT time values or accept the GMT times provided by ETS.	UTC displays on the MPS main window are updated.	command to help in defining GMT time: date -uTime Format: yy ddd hh mm ssThis step is optional.Release A: This step is not required.Release B: This step is required.		
1.010	EOC (Data & R/T Servers)	Start the Sybase servers on the Data Server and Real-Time Server.	Sybase server #1 has started on Data Server, "foseoc7". Sybase server #2 has started on Real-Time Server, "foseoc6".	The Sybase servers are already up and running so this step is not performed-step skipped.		4/21/97
1.011	EOC(User Station)	Login to an EOC User Station, "foseXoe" or "msseoc2". Enter ivvtest <Return> Enter [password] <Return>	The SparcStation console with the One room button is sensitized.	X is 5, 8, 9, or 10.		4/21/97
1.012	EOC(User Station)	Select room Two from the SparcStation console.	The Two room button is sensitized.			4/21/97
1.013	EOC(User Station)	In a X-terminal window:Type netscape & <Return>Check to see if any FOS process endpoints exist.Invoke the URL http://198.118.199.20/FosDbHome.htmlSelect Nameserver Database.Click on Clear Form.Click on Submit	The NETSCAPE window appears.The FOS Database Access Page appears.A message is displayed which states that 0 endpoints are found.			4/21/97

Step ID	Station	Actions	Results	Comments	Verified Reqs.	Last Modified
1.014	EOC(User Station)	Select room One from the SparcStation console.	The SparcStation console with the One room button is sensitized.			4/21/97
1.015	EOC(Data Server)	Start up the FOS software for the Data Server.In a X-terminal window, remotely login to the FOS Data Server, "foseoc7".Type rlogin foseoc7 <Return>Enter [password] <Return> at password prompt.Type ps -ef <Return>; look for FOS processes and delete them using the kill -9 [PID].Type test <Return> (alias for cd /fos/test/am1/scripts/setup) Type source A2_DataServerStartup <Return>	Fourteen FOS software processes are now running on the Data Server.The following messages are displayed: Successful installation of signal handler FqLqSigHand, and a repeating Waiting for activity.	The FOS software processes are the ODB and FOS subsystem processes.rlogin has a -l <username> option to specify the user or it defaults to the login account name.PID stands for process ID.Alias test will be used to change directory.		4/21/97
1.016	EOC(Real -Time Server)	Start up the FOS software for the Real-Time Server.In a X-terminal window, remotely login to the FOS Real-Time Server, "foseoc6".Type rlogin foseoc6 <Return>Enter [password] <Return> at password prompt.Type ps -	Thirty-four FOS software processes are now running on the Real-Time Server.R/T logical string 100 is created.The following messages are displayed: Creating a ptp coupler	The FOS software processes are the ODB and FOS subsystem processes.rlogin has a -l <username> option to specify the user or it defaults to the login account name PID stands for process ID.Alias test		4/21/97

Step ID	Station	Actions	Results	Comments	Verified Reqs.	Last Modified
		ef <Return>; look for FOS processes and delete them using the kill -9 [PID].Type test <Return> (alias for cd /fos/test/am1/scripts/setup) Type source A2_RealTimeServerStartup <Return>		will be used to change directory.		
1.017	EOC(User Station)	Select room Two from the SparcStation console.	The Two room button is sensitized.			4/21/97
1.018	EOC(User Station)	Check to see if 14 FOS process endpoints exist for the Data Server.Click on Back.Enter foseoc7 in the Entry Id field.Click on Submit.	A message is displayed which states that 14 endpoints are found.	If any active FOS processes are left from a previous session, kill them using the following command: kill -9 [process ID]		4/21/97
1.019	EOC(User Station)	Check to see if 34 FOS process endpoints exist for the R/T Server.Click on Back.Enter foseoc6 in the Entry Id field.Click on Submit.	A message is displayed which states that 34 endpoints are found.	If any active FOS processes are left from a previous session, kill them using the following command: kill -9 [process ID]		4/21/97
1.020	EOC(User Station)	Check to see if 0 FOS process endpoints exist for the User Station "foseXoe".Click on Back.Enter "foseXoe" in the Entry Id field.Click on Submit.Exit Netscape.	A message is displayed which states that 0 endpoints are found.Netscape window is no longer displayed.	If any active FOS processes are left from a previous session, kill them using the following command: kill -9 [process ID]		4/21/97

Step ID	Station	Actions	Results	Comments	Verified Reqs.	Last Modified
1.021	EOC(User Station)	Select room One from the SparcStation console.	The SparcStation console with the One room button is sensitized.			4/21/97
1.022	EOC(User Station)	Start up the FOS software for the User Station, "foseXoe".Login to the EOC User Station, "foseXoe" Enter ivvtest3 <Return> Enter [password] <Return>In a terminal window, type test <Return>(alias for cd /fos/test/am1/scripts/setup) Type source A2_UserStationStartup <Return>	The appropriate FOS software processes are now running on the EOC User Station.The following windows are displayed: Control Window , General Scheduler, EOS Timeline, Load Manager, Load Generator, BAP Definer, and Activity Definer.	The FOS software processes are the ODB and FOS subsystem processes.X is 5, 8, 9, or 10.Use two User Stations. A back-up station (User Station 2) is needed; the system is very unstable. User Station 1 is the initial primary station.		4/21/97
1.023	EOC (User Station)	Iconify the six Planning and Scheduling windows: General Scheduler, EOS Timeline, Load Manager, Load Generator, BAP Definer, and Activity Definer	The Planning and Scheduling windows are now icons.	Use the Mini_Ctrl window.		4/21/97
1.024	EOC (User Station)	Bring up the Event Display Window via the Tools Button on the Control Window.Click on Tools.Select Event_Display.Click on OK.Deselect TLM and	The Event Display Window appears.The event windows are configured to specification.	Make sure that Netscape is not up in any of the workstation rooms.		4/21/97

Step ID	Station	Actions	Results	Comments	Verified Reqs.	Last Modified
		bold DMS, RMS, and ANL for the Event_Display on User Station 1.Select all S/S and bold DMS, RMS, and ANL for the Event_Display on User Station 2.Click the GRAPH buttons on the event display windows to deselect the graph displays.				
1.025	EOC (User Station)	Enable telemetry data archiving.Archiving is automatically enabled.	An event message stating that telemetry archiving is enabled. The Release A message that is displayed in the R/T Server startup window is myTlmArchiveFlag: 1.	Release A: Archiving is already enabled.Release B: The ECL directive ARCHIVE will control the archiving modes: ARCHIVE TLM =ENABLE <tlm TYPE>		4/21/97
1.026	EOC (User Station)	In a terminal window, invoke the script that generates the Test Configuration Report.Type config (alias cd /home/ivvtest3/config)Type tconfig (alias /home/ivvtest3/scripts/tconfig.scr)Type mv testconfig test#Yr_config_eoc4.<date>	A file named test#Yr_config_eoc4.<date>, which contains the "As Run" Configuration details, is in the /home/ivvtest3/config directory.	A directory ~/config has already been created. Aliases config and tconfig have already been added to the ivvtest3 .cshrc.# is 1 thru 10.Y is d or f.		4/21/97
1.027	~	Record the system configuration on the	The "As Run" Configuration details are			4/21/97

Step ID	Station	Actions	Results	Comments	Verified Reqs.	Last Modified
		execution cover sheet.	recorded on the execution cover sheet.			
2.001	EOC(User Station)	Select room One from the SparcStation console.	The SparcStation console with the One room button is sensitized.			4/21/97
2.002	EOC(User Station)	Invoke the Analysis_Request_Builder tool.Click on Tools button on the Control Window.Select Analysis_Request_Builder. Click on OK.	Analysis_Request_Builder screen appears.			4/21/97
2.003	EOC(User Station)	Enter AR1a in the Request Name field.	AR1a appears in the Request Name text field.			4/21/97
2.004	EOC(User Station)	Select the EOC Only radio button under the Request Processing Site label on the Analysis_Request_Builder screen.	The EOC Only radio button is sensitized.	Data will be processed using the R/T Server resources.		4/21/97
2.005	EOC(User Station)	Select the All Data radio button under the Data Quality label on the Analysis_Request_Builder screen.	The All Data radio button is sensitized.			4/21/97
2.006	~	Select a pair time for telemetry data to be extracted from the FOS DMS and used for analysis product generation.		Absolute time contains year, day, hour, minute, and second.Relative time contains hour, minute, and second.		4/21/97
2.007	EOC(User	Click on the Select Time	Pair Time Selector screen	Obtain the start and stop		4/21/97

Step ID	Station	Actions	Results	Comments	Verified Reqs.	Last Modified
	Station)	push button to invoke the Pair Time Selector tool. Select Absolute, Time, and Specify Duration.	appears. The Absolute, Time, and Specify Duration radio buttons are sensitized.	times from the EOC1 test results.Data being extracted is from the RT HK portion of EOC1.1.		
2.008	EOC(User Station)	Enter the start date for the historical telemetry data.Type 1997/027 <Return>	The new start date is accepted and displayed in the start date text field and the Absolute Start Time field.	Date = <year>/<day of the year>		4/21/97
2.009	EOC(User Station)	Enter the start time for the historical telemetry data.Type 21:40:33 <Return>	The new start time is accepted and displayed in the start time text field and the Absolute Start Time field.	Time = <hrs><mins><secs>(e.g., 17:44:32)		4/21/97
2.010	EOC(User Station)	Enter a duration of 5 minutes.Select Minute.Type 5 <Return>	The new duration is accepted and displayed in the Duration fields.			4/21/97
2.011	EOC(User Station)	Accept pair time.Click on the OK push button.	This pair time is now selected and displayed in the Selected Times table on the Analysis_Request_Builder screen.			4/21/97
2.012	~	Select a pair time for telemetry data to be extracted from the FOS DMS and used for analysis product generation.		Absolute time contains year, day, hour, minute, and second.Relative time contains hour, minute, and second.		4/21/97
2.013	EOC(User Station)	Click on the Select Time push button to invoke the	Pair Time Selector screen appears. The Absolute,	Obtain the start and stop times from the EOC1 test		4/21/97

Step ID	Station	Actions	Results	Comments	Verified Reqs.	Last Modified
		Pair Time Selector tool. Select Absolute, Time, and Specify End Time.	Time, and Specify End Time radio buttons are sensitized.	results.Data being extracted is from the RT HK portion of EOC1.1.		
2.014	EOC(User Station)	Enter the start date for the historical telemetry data.Type 1997/027 <Return>	The new start date is accepted and displayed in the start date text field and the Absolute Start Time field.	Date = <year>/<day of the year>		4/21/97
2.015	EOC(User Station)	Enter the start time for the historical telemetry data.Type 21:40:33 <Return>	The new start time is accepted and displayed in the start time text field and the Absolute Start Time field.	Time = <hrs><mins><secs>(e.g., 17:44:32)		4/21/97
2.016	EOC(User Station)	Enter the stop date for the historical telemetry data.Type 1997/027 <Return>	The new stop date is accepted and displayed in the stop date text field and the Absolute Stop Time field.	Date = <year>/<day of the year>		4/21/97
2.017	EOC(User Station)	Enter the stop time for the historical telemetry data.Type 21:45:33 <Return>	The new stop time is accepted and displayed in the stop time text field and the Absolute Stop Time field.	Time = <hrs><mins><secs>(e.g., 17:44:32)		4/21/97
2.018	EOC(User Station)	Accept pair time.Click on the OK push button.	This pair time is now selected and displayed in the Selected Times table on the Analysis_Request_Builder screen.			4/21/97
2.019	~	Select a parameter with				4/21/97

Step ID	Station	Actions	Results	Comments	Verified Reqs.	Last Modified
		sampling and statistics rates.				
2.020	EOC(User Station)	Click on the Select Telemetry push button to invoke the Analysis Telemetry Selector tool.	Analysis Telemetry Selector screen appears.			4/21/97
2.021	~	Select subsystem paths.				4/21/97
2.022	EOC(User Station)	Click on the Filter push button to invoke the Selection Filter tool.	Selection Filter screen appears.	The third listbox is for Sample Type: I for Current, V for Voltage, T for Temperature, B for Bi-Level, P for Power, C for Configuration Information, S for Status Information and N for Numeric Counter Data.		4/21/97
2.023	EOC(User Station)	Click on AM1 in the first listbox.Select AST from the second listbox.Select V from the third listbox.Click on the Select push button to select the specified subsystem path.	The selected subsystem path, AM1_AST_V, is now selected and displayed in the right most listbox labeled Selected.			4/21/97
2.024	EOC(User Station)	Select CDH from the second listbox.Select C from the third listbox.Click on the Select push button to select the specified subsystem path.	The selected subsystem path, AM1_CDH_C, is now selected and displayed in the right most listbox labeled Selected.			4/21/97
2.025	EOC(User	Select N from the third	The selected subsystem			4/21/97

Step ID	Station	Actions	Results	Comments	Verified Reqs.	Last Modified
	Station)	listbox.Click on the Select push button to select the specified subsystem path.	path, AM1_CDH_N, is now selected and displayed in the right most listbox labeled Selected.			
2.026	EOC(User Station)	Select S from the third listbox.Click on the Select push button to select the specified subsystem path.	The selected subsystem path, AM1_CDH_S, is now selected and displayed in the right most listbox labeled Selected.			4/21/97
2.027	EOC(User Station)	Select EAS from the second listbox.Select B from the third listbox.Click on the Select push button to select the specified subsystem path.	The selected subsystem path, AM1_EAS_B, is now selected and displayed in the right most listbox labeled Selected.			4/21/97
2.028	EOC(User Station)	Select EPS from the second listbox.Select S from the third listbox.Click on the Select push button to select the specified subsystem path.	The selected subsystem path, AM1_EPS_S, is now selected and displayed in the right most listbox labeled Selected.			4/21/97
2.029	EOC(User Station)	Select COM from the second listbox.Select P from the third listbox.Click on the Select push button to select the specified subsystem path.	The selected subsystem path, AM1_COM_P, is now selected and displayed in the right most listbox labeled Selected.			4/21/97
2.030	EOC(User Station)	Select S from the third listbox.Click on the Select push button to select the	The selected subsystem path, AM1_COM_S is now selected and displayed in			4/21/97

Step ID	Station	Actions	Results	Comments	Verified Reqs.	Last Modified
		specified subsystem path.	the right most listbox labeled Selected.			
2.031	EOC(User Station)	Select GNC from the second listbox.Select N from the third listbox.Click on the Select push button to select the specified subsystem path.	The selected subsystem path, AM1_GNC_N, is now selected and displayed in the right most listbox labeled Selected.			4/21/97
2.032	EOC(User Station)	Select MIS from the second listbox.Select I from the third listbox.Click on the Select push button to select the specified subsystem path.	The selected subsystem path, AM1_MIS_I, is now selected and displayed in the right most listbox labeled Selected.			4/21/97
2.033	EOC(User Station)	Select MOD from the second listbox.Select T from the third listbox.Click on the Select push button to select the specified subsystem path.	The selected subsystem path, AM1_MOD_T is now selected and displayed in the right most listbox labeled Selected.			4/21/97
2.034	EOC(User Station)	Select PMS from the second listbox.Select T from the third listbox.Click on the Select push button to select the specified subsystem path.	The selected subsystem path, AM1_PMS_T is now selected and displayed in the right most listbox labeled Selected.			4/21/97
2.035	EOC(User Station)	Select SDU from the second listbox.Click on the Select push button to select the specified subsystem	The selected subsystem path, AM1_SDU, is now selected and displayed in the right most listbox			4/21/97

Step ID	Station	Actions	Results	Comments	Verified Reqs.	Last Modified
		path.	labeled Selected.			
2.036	EOC(User Station)	Select TCS from the second listbox.Select I from the third listbox.Click on the Select push button to select the specified subsystem path.	The selected subsystem path, AM1_TCS_I, is now selected and displayed in the right most listbox labeled Selected.			4/21/97
2.037	EOC(User Station)	Click on the OK push button in the Selection Filter window to accept the selected subsystem paths to be used for the parameter selection process.	The selected subsystem paths are now displayed in the Subsystems listbox on the Analysis Telemetry Selector screen.			4/21/97
2.038	~	Select parameters and specify their sampling and statistics rates using the Analysis Telemetry Selector tool.				4/21/97
2.039	EOC(User Station)	Click on the radio button for AM1_AST_V in the Subsystems listbox on the Analysis Telemetry Selector screen to select this subsystem path.	The radio button for the AM1_AST_V subsystem path is sensitized and a list of AM1_AST_V available parameters is displayed.			4/21/97
2.040	EOC(User Station)	Click on the "Nth Sample, N=" radio button inside the frame labeled Sampling Rate, and enter the integer 2.	The "Nth Sample, N=" radio button is sensitized and integer 2 is displayed in the Nth sample field.			4/21/97
2.041	EOC(User	Enter the integer 1 and	The value 1 is displayed in			4/21/97

Step ID	Station	Actions	Results	Comments	Verified Reqs.	Last Modified
	Station)	click on Mins in the pull down option menu inside the frame labeled Statistics. Click on the statistics toggle button to select the statistic generation option.	the Statistics frame field and the statistics toggle button is sensitized. Minute units are also displayed.			
2.042	EOC(User Station)	Click on AST_VA_AA_SPARE01 in the Available Parameters listbox to select this parameter mnemonic.	The selected parameter mnemonic, AST_VA_AA_SPARE01, is highlighted.			4/21/97
2.043	EOC(User Station)	Click on the Select push button to select AST_VA_AA_SPARE01 with the sampling rate set to 2nd sample and a statistics rate of 1 minute.	The parameter mnemonic, AST_VA_AA_SPARE01, and its sampling and statistics rates are displayed in the Selected Parameters table on the Analysis Telemetry Selector screen.	The statistics rates are only displayed in seconds. Instead of 1 minute being displayed, 60 seconds is displayed (NCR exists).		4/21/97
2.044	EOC(User Station)	Click on AST_VA_AA_SPARE01 in the Available Parameters listbox to deselect this parameter mnemonic.	The selected parameter mnemonic, AST_VA_AA_SPARE01,			

Step ID	Station	Actions	Results	Comments	Verified Reqs.	Last Modified
	Station)	for AM1_CDH_N in the Subsystems listbox on the Analysis Telemetry Selector screen to select this subsystem path.	AM1_CDH_N subsystem path is sensitized and a list of AM1_CDH_N available parameters is displayed.			
2.047	EOC(User Station)	Click on CDH_NR_SSR2_HKRECTR in the Available Parameters listbox to select this parameter mnemonic.	The selected parameter mnemonic, CDH_NR_SSR2_HKRECTR, is highlighted.			4/21/97
2.048	EOC(User Station)	Click on the Select push button to select CDH_NR_SSR2_HKRECTR with the sampling rate set to 2nd sample and a statistics rate of 1 minute.	The parameter mnemonic, CDH_NR_SSR2_HKRECTR, and its sampling and statistics rates are displayed in the Selected Parameters table on the Analysis Telemetry Selector screen.	The statistics rates are only displayed in seconds. Instead of 1 minute being displayed, 60 seconds is displayed (NCR exists).		4/21/97
2.049	EOC(User Station)	Click on CDH_NR_SSR2_HKRECTR in the Available Parameters listbox to deselect this parameter mnemonic.	The selected parameter mnemonic, CDH_NR_SSR2_HKRECTR, is no longer highlighted.			4/21/97
2.050	EOC(User Station)	Click on the radio button for AM1_CDH_N in the Subsystems listbox on the Analysis Telemetry Selector screen to deselect this subsystem path.	The radio button for the AM1_CDH_N subsystem path is no longer sensitized and the available parameters list is empty.			4/21/97
2.051	EOC(User	Click on the radio button	The radio button for the			4/21/97

Step ID	Station	Actions	Results	Comments	Verified Reqs.	Last Modified
	Station)	for AM1_EAS_B in the Subsystems listbox on the Analysis Telemetry Selector screen to select this subsystem path.	AM1_EAS_B subsystem path is sensitized and a list of AM1_EAS_B available parameters is displayed.			
2.052	EOC(User Station)	Click on EAS_BR_HGA_BOOMA_ARM in the Available Parameters listbox to select this parameter mnemonic.	The selected parameter mnemonic, EAS_BR_HGA_BOOMA_ARM, is highlighted.			4/21/97
2.053	EOC(User Station)	Click on the Select push button to select EAS_BR_HGA_BOOMA_ARM with the sampling rate set to 2nd sample and a statistics rate of 1 minute.	The parameter mnemonic, EAS_BR_HGA_BOOMA_ARM, and its sampling and statistics rates are displayed in the Selected Parameters table on the Analysis Telemetry Selector screen.	The statistics rates are only displayed in seconds. Instead of 1 minute being displayed, 60 seconds is displayed (NCR exists).		4/21/97
2.054	EOC(User Station)	Click on EAS_BR_HGA_BOOMA_ARM in the Available Parameters listbox to deselect this parameter mnemonic.	The selected parameter mnemonic, EAS_BR_HGA_BOOMA_ARM, is no longer highlighted.			4/21/97
2.055	EOC(User Station)	Click on the radio button for AM1_EAS_B in the Subsystems listbox on the Analysis Telemetry Selector screen to deselect this subsystem path.	The radio button for the AM1_EAS_B subsystem path is no longer sensitized and the available parameters list is empty.			4/21/97
2.056	EOC(User	Click on the radio button	The radio button for the			4/21/97

Step ID	Station	Actions	Results	Comments	Verified Reqs.	Last Modified
	Station)	for AM1_EPS_S in the Subsystems listbox on the Analysis Telemetry Selector screen to select this subsystem path..	AM1_EPS_S subsystem path is sensitized and a list of AM1_EPS_S available parameters is displayed.			
2.057	EOC(User Station)	Click on EPS_SR_SA_RAT_ADJ_A in the Available Parameters listbox to select this parameter mnemonic.	The selected parameter mnemonic, EPS_SR_SA_RAT_ADJ_A, is highlighted.			4/21/97
2.058	EOC(User Station)	Click on the Select push button to select EPS_SR_SA_RAT_ADJ_A with the sampling rate set to 2nd sample and a statistics rate of 1 minute.	The parameter mnemonic, EPS_SR_SA_RAT_ADJ_A, and its sampling and statistics rates are displayed in the Selected Parameters table on the Analysis Telemetry Selector screen.	The statistics rates are only displayed in seconds. Instead of 1 minute being displayed, 60 seconds is displayed (NCR exists).		4/21/97
2.059	EOC(User Station)	Click on EPS_SR_SA_RAT_ADJ_A in the Available Parameters listbox to deselect this parameter mnemonic.	The selected parameter mnemonic, EPS_SR_SA_RAT_ADJ_			

Step ID	Station	Actions	Results	Comments	Verified Reqs.	Last Modified
	Station)	radio button inside the frame labeled Sampling Rate.	button is sensitized.			
2.062	EOC(User Station)	Click on the toggle button inside the frame labeled Statistics to deselect the statistics rate option.	The toggle button inside the frame labeled Statistics is no longer sensitized.			4/21/97
2.063	EOC(User Station)	Click on the radio button for AM1_SDU in the Subsystems listbox on the Analysis Telemetry Selector screen to select this subsystem path.	The radio button for the AM1_SDU subsystem path is sensitized and a list of AM1_SDU available parameters is displayed.			4/21/97
2.064	EOC(User Station)	Click on SDU_SCTIME in the Available Parameters listbox to select this parameter mnemonic.	The selected parameter mnemonic, SDU_SCTIME, is highlighted.			4/21/97
2.065	EOC(User Station)	Click on the Select push button to select SDU_SCTIME with the sampling rate set to Changes Only.	The parameter mnemonic, SDU_SCTIME, and its sampling rate are displayed in the Selected Parameters table on the Analysis Telemetry Selector screen.			4/21/97
2.066	EOC(User Station)	Click on SDU_SCTIME in the Available Parameters listbox to deselect this parameter mnemonic.	The selected parameter mnemonic, SDU_SCTIME, is no longer highlighted.			4/21/97
2.067	EOC(User Station)	Click on SDU_PCKT_APID in the Available Parameters	The selected parameter mnemonic, SDU_PCKT_APID, is			4/21/97

Step ID	Station	Actions	Results	Comments	Verified Reqs.	Last Modified
		listbox to select this parameter mnemonic.	highlighted.			
2.068	EOC(User Station)	Click on the Select push button to select SDU_PCKT_APID with the sampling rate set to Changes Only.	The parameter mnemonic, SDU_PCKT_APID, and its sampling rate are displayed in the Selected Parameters table on the Analysis Telemetry Selector screen.			4/21/97
2.069	EOC(User Station)	Click on SDU_PCKT_APID in the Available Parameters listbox to deselect this parameter mnemonic.	The selected parameter mnemonic, SDU_PCKT_APID, is no longer highlighted.			4/21/97
2.070	EOC(User Station)	Click on SDU_PACKET_SEQ in the Available Parameters listbox to select this parameter mnemonic.	The selected parameter mnemonic, SDU_PACKET_SEQ, is highlighted.			4/21/97
2.071	EOC(User Station)	Click on the Select push button to select SDU_PACKET_SEQ with the sampling rate set to Changes Only.	The parameter mnemonic, SDU_PACKET_SEQ, and its sampling rate are displayed in the Selected Parameters table on the Analysis Telemetry Selector screen.			4/21/97
2.072	EOC(User Station)	Click on SDU_PACKET_SEQ in the Available Parameters listbox to deselect this parameter mnemonic.	The selected parameter mnemonic, SDU_PACKET_SEQ, is no longer highlighted.			4/21/97

Step ID	Station	Actions	Results	Comments	Verified Reqs.	Last Modified
2.073	EOC(User Station)	Click on SDU_PACKET_LENGTH in the Available Parameters listbox to select this parameter mnemonic.	The selected parameter mnemonic, SDU_PACKET_LENGTH , is highlighted.			4/21/97
2.074	EOC(User Station)	Click on the Select push button to select SDU_PACKET_LENGTH with the sampling rate set to Changes Only.	The parameter mnemonic, SDU_PACKET_LENGTH , and its sampling rate are displayed in the Selected Parameters table on the Analysis Telemetry Selector screen.			4/21/97
2.075	EOC(User Station)	Click on SDU_PACKET_LENGTH in the Available Parameters listbox to deselect this parameter mnemonic.	The selected parameter mnemonic, SDU_PACKET_LENGTH , is no longer highlighted.			4/21/97
2.076	EOC(User Station)	Click on the radio button for AM1_SDU in the Subsystems listbox on the Analysis Telemetry Selector screen to deselect this subsystem path.	The radio button for the AM1_SDU subsystem path is no longer sensitized and the available parameters list is empty.			4/21/97
2.077	EOC(User Station)	Click on the OK push button to accept the selected parameter(s) with their sampling and statistics rates for the AR1a analysis request.	The Analysis Telemetry Selector window closes. The selected parameter(s) with their sampling and statistics rates are displayed in the Selected Telemetry table on the			4/21/97

Step ID	Station	Actions	Results	Comments	Verified Reqs.	Last Modified
			Analysis_Request_Builder screen.			
2.078	EOC(User Station)	Enter /fos/test/am1/datasets/AR_1a in the Output DataSet Name field. Click on the toggle button next to the field to enable the writing of the results to the file named AR_1a.data.	The toggle button is sensitized and the name /fos/test/am1/datasets/AR_1a is displayed in the Output DataSet Name field.	The output data set name that is entered does not include the ".data" extension. The ".data" extension is added upon dataset generation.		4/21/97
2.079	EOC(User Station)	Save this request by selecting Save As from the File pull-down menu located on the top menu bar of the Analysis_Request_Builder, and entering the filename AR1a.	A message stating that the analysis request named AR1a is successfully saved is displayed in a pop-up notification window.			4/21/97
2.080	EOC(User Station)	Open a new analysis request by selecting New from the File pull-down menu located on the top menu bar of the Analysis_Request_Builder, and entering the filename AR1b.	A blank analysis request form appears.			4/21/97
2.081	EOC(User Station)	Enter AR1b in the Request Name field.	AR1b appears in the Request Name text field.			4/21/97
2.082	EOC(User Station)	Select the EOC Only radio button under the Request	The EOC Only radio button is sensitized.	Data will be processed using the R/T Server		4/21/97

Step ID	Station	Actions	Results	Comments	Verified Reqs.	Last Modified
		Processing Site label on the Analysis_Request_Builder screen.		resources.		
2.083	EOC(User Station)	Select the All Data radio button under the Data Quality label on the Analysis_Request_Builder screen.	The All Data radio button is sensitized.			4/21/97
2.084	~	Select a pair time for telemetry data to be extracted from the FOS DMS and used for analysis product generation.		Absolute time contains year, day, hour, minute, and second.Relative time contains hour, minute, and second.		4/21/97
2.085	EOC(User Station)	Click on the Select Time push button to invoke the Pair Time Selector tool. Select Absolute, Time, and Specify End Time.	Pair Time Selector screen appears. The Absolute, Time, and Specify End Time radio buttons are sensitized.	Obtain the start and stop times from the EOC1 test results.Data being extracted is from the HK EU Conversion and Limits portion of EOC1.3.		4/21/97
2.086	EOC(User Station)	Enter the start date for the historical telemetry data.Type 1997/035 <Return>	The new start date is accepted and displayed in the start date text field and the Absolute Start Time field.	Date = <year>/<day of the year>		4/21/97
2.087	EOC(User Station)	Enter the start time for the historical telemetry data.Type 02:41:49 <Return>	The new start time is accepted and displayed in the start time text field and the Absolute Start Time field.	Time = <hrs><mins><secs>(e.g., 17:44:32)		4/21/97
2.088	EOC(User	Enter the stop date for the	The new stop date is	Date = <year>/<day of the		4/21/97

Step ID	Station	Actions	Results	Comments	Verified Reqs.	Last Modified
	Station)	historical telemetry data.Type 1997/035 <Return>	accepted and displayed in the stop date text field and the Absolute Stop Time field.	year>		
2.089	EOC(User Station)	Enter the stop time for the historical telemetry data.Type 02:53:26 <Return>	The new stop time is accepted and displayed in the stop time text field and the Absolute Stop Time field.	Time = <hrs><mins><secs>(e.g., 17:44:32)		4/21/97
2.090	EOC(User Station)	Accept pair time.Click on the OK push button.	This pair time is now selected and displayed in the Selected Times table on the Analysis_Request_Builder screen.			4/21/97
2.091	EOC(User Station)	Click on the Select Time push button to invoke the Pair Time Selector tool. Select Absolute, Time, and Specify End Time.	Pair Time Selector screen appears. The Absolute, Time, and Specify End Time radio buttons are sensitized.	Obtain the start and stop times from the EOC1 test results.Data being extracted is from the H&S EU Conversion and Limits portion of EOC1.3.		4/21/97
2.092	EOC(User Station)	Enter the start date for the historical telemetry data.Type 1997/035 <Return>	The new start date is accepted and displayed in the start date text field and the Absolute Start Time field.	Date = <year>/<day of the year>		4/21/97
2.093	EOC(User Station)	Enter the start time for the historical telemetry data.Type 02:59:38 <Return>	The new start time is accepted and displayed in the start time text field and the Absolute Start Time	Time = <hrs><mins><secs>(e.g., 17:44:32)		4/21/97

Step ID	Station	Actions	Results	Comments	Verified Reqs.	Last Modified
			field.			
2.094	EOC(User Station)	Enter the stop date for the historical telemetry data.Type 1997/035 <Return>	The new stop date is accepted and displayed in the stop date text field and the Absolute Stop Time field.	Date = <year>/<day of the year>		4/21/97
2.095	EOC(User Station)	Enter the stop time for the historical telemetry data.Type 03:05:21 <Return>	The new stop time is accepted and displayed in the stop time text field and the Absolute Stop Time field.	Time = <hrs><mins><secs>(e.g., 17:44:32)		4/21/97
2.096	EOC(User Station)	Accept pair time.Click on the OK push button.	This pair time is now selected and displayed in the Selected Times table on the Analysis_Request_Builder screen.			4/21/97
2.097	~	Select parameters and specify their sampling and statistics rates using the Analysis Telemetry Selector tool.				4/21/97
2.098	EOC(User Station)	Select CDH_CR_ACT_DAT_CH 1 with the sampling rate set to the Changes Only and a statistics rate of 20 seconds.	The parameter mnemonic, CDH_CR_ACT_DAT_CH 1, and its sampling and statistics rates are displayed in the Selected Parameters table on the Analysis Telemetry Selector screen.			4/21/97
2.099	EOC(User	Select	The parameter mnemonic,			4/21/97

Step ID	Station	Actions	Results	Comments	Verified Reqs.	Last Modified
	Station)	CDH_SR_ACT_CLCW_STAT with the sampling rate set to the Changes Only and a statistics rate of 20 seconds.	CDH_SR_ACT_CLCW_STAT, and its sampling and statistics rates are displayed in the Selected Parameters table on the Analysis Telemetry Selector screen.			
2.100	EOC(User Station)	Select COM_PR_SBT1_FWD_RF with the sampling rate set to the Changes Only and a statistics rate of 20 seconds.	The parameter mnemonic, COM_PR_SBT1_FWD_RF, and its sampling and statistics rates are displayed in the Selected Parameters table on the Analysis Telemetry Selector screen.			4/21/97
2.101	EOC(User Station)	Select COM_SR_SBT1_DOP_SUM with the sampling rate set to the 7th sample and a statistics rate of 40 seconds.	The parameter mnemonic, COM_SR_SBT1_DOP_SUM, and its sampling and statistics rates are displayed in the Selected Parameters table on the Analysis Telemetry Selector screen.			4/21/97
2.102	EOC(User Station)	Select SDU_SCTIME with the sampling rate set to the Changes Only and no statistic generation (statistics option deselected).	The parameter mnemonic, SDU_SCTIME, and its sampling rate are displayed in the Selected Parameters table on the Analysis Telemetry Selector screen.			4/21/97
2.103	EOC(User Station)	Select SDU_PCKT_APID with the sampling rate set to the Changes Only and no statistic generation	The parameter mnemonic, SDU_PCKT_APID, and its sampling rate are displayed in the Selected Parameters			4/21/97

Step ID	Station	Actions	Results	Comments	Verified Reqs.	Last Modified
		(statistics option deselected).	table on the Analysis Telemetry Selector screen.			
2.104	EOC(User Station)	Select SDU_PACKET_SEQ with the sampling rate set to the Changes Only and no statistic generation (statistics option deselected).	The parameter mnemonic, SDU_PACKET_SEQ, and its sampling rate are displayed in the Selected Parameters table on the Analysis Telemetry Selector screen.			4/21/97
2.105	EOC(User Station)	Select SDU_PACKET_LENGTH with the sampling rate set to the Changes Only and no statistic generation (statistics option deselected).	The parameter mnemonic, SDU_PACKET_LENGTH , and its sampling rate are displayed in the Selected Parameters table on the Analysis Telemetry Selector screen.			4/21/97
2.106	EOC(User Station)	Select GNC_NR_FSS_NALPHA with the sampling rate set to the 5th sample and a statistics rate of 40 seconds.	The parameter mnemonic, GNC_NR_FSS_NALPHA, and its sampling and statistics rates are displayed in the Selected Parameters table on the Analysis Telemetry Selector screen.			4/21/97
2.107	EOC(User Station)	Select MIS_IR_CAMERA_AN28 V with the sampling rate set to the Changes Only and a statistics rate of 20 seconds.	The parameter mnemonic, MIS_IR_CAMERA_AN28 V, and its sampling and statistics rates are displayed in the Selected Parameters table on the Analysis Telemetry Selector screen.			4/21/97

Step ID	Station	Actions	Results	Comments	Verified Reqs.	Last Modified
2.108	EOC(User Station)	Select MOD_TP_AO_PZ_BY_RC with the sampling rate set to All Data and a statistics rate of 20 seconds.	The parameter mnemonic, MOD_TP_AO_PZ_BY_RC, and its sampling and statistics rates are displayed in the Selected Parameters table on the Analysis Telemetry Selector screen.			4/21/97
2.109	EOC(User Station)	Select PMS_TR_PMEA1 with the sampling rate set to the 3rd sample and a statistics rate of 40 seconds.	The parameter mnemonic, PMS_TR_PMEA1, and its sampling and statistics rates are displayed in the Selected Parameters table on the Analysis Telemetry Selector screen.			4/21/97
2.110	EOC(User Station)	Select TCS_IR_BATHCE_EPCA with the sampling rate set to the 4th sample and a statistics rate of 40 seconds.	The parameter mnemonic, TCS_IR_BATHCE_EPCA, and its sampling and statistics rates are displayed in the Selected Parameters table on the Analysis Telemetry Selector screen.			4/21/97
2.111	EOC(User Station)	Deselect the parameter mnemonic TCS_IR_BATHCE_EPCA in the Available Parameters listbox on the Analysis Telemetry Selector screen.	The selected parameter mnemonic, TCS_IR_BATHCE_EPCA, is no longer highlighted.			4/21/97
2.112	EOC(User Station)	Deselect the subsystem path AM1_TCS_I in the Subsystems listbox on the	The radio button for the AM1_TCS_I subsystem path is no longer sensitized			4/21/97

Step ID	Station	Actions	Results	Comments	Verified Reqs.	Last Modified
		Analysis Telemetry Selector screen.	and the available parameters list is empty.			
2.113	EOC(User Station)	Click on the OK push button to accept the selected parameter(s) with their sampling and statistics rates for the AR1b analysis request.	The Analysis Telemetry Selector window closes. The selected parameter(s) with their sampling and statistics rates are displayed in the Selected Telemetry table on the Analysis_Request_Builder screen.			4/21/97
2.114	EOC(User Station)	Enter /fos/test/am1/datasets/AR_1b in the Output DataSet Name field. Click on the toggle button next to the field to enable the writing of the results to the file named AR_1b.data.	The toggle button is sensitized and the name /fos/test/am1/datasets/AR_1b is displayed in the Output DataSet Name field.	The output data set name that is entered does not include the ".data" extension. The ".data" extension is added upon dataset generation.		4/21/97
2.115	EOC(User Station)	Save this request by selecting Save from the File pull-down menu located on the top menu bar of the Analysis_Request_Builder.	A message stating that the analysis request named AR1b is successfully saved is displayed in a pop-up notification window.			4/21/97
2.116	EOC(User Station)	Open a new analysis request by selecting New from the File pull-down menu located on the top menu bar of the Analysis_Request_Builder,	A blank analysis request form appears.			4/21/97

Step ID	Station	Actions	Results	Comments	Verified Reqs.	Last Modified
		and entering the filename AR1c.				
2.117	EOC(User Station)	Enter AR1c in the Request Name field.	AR1c appears in the Request Name text field.			4/21/97
2.118	EOC(User Station)	Select the EOC Only radio button under the Request Processing Site label on the Analysis_Request_Builder screen.	The EOC Only radio button is sensitized.	Data will be processed using the R/T Server resources.		4/21/97
2.119	EOC(User Station)	Select the All Data radio button under the Data Quality label on the Analysis_Request_Builder screen.	The All Data radio button is sensitized.			4/21/97
2.120	~	Select a pair time for telemetry data to be extracted from the FOS DMS and used for analysis product generation.		Absolute time contains year, day, hour, minute, and second.Relative time contains hour, minute, and second.		4/21/97
2.121	EOC(User Station)	Click on the Select Time push button to invoke the Pair Time Selector tool. Select Absolute, Time, and Specify End Time.	Pair Time Selector screen appears. The Absolute, Time, and Specify End Time radio buttons are sensitized.	Obtain the start and stop times from the EOC1 test results.Data being extracted is from the Delta Limits portion of EOC1.3.		4/21/97
2.122	EOC(User Station)	Enter the start date for the historical telemetry data.Type 1997/035 <Return>	The new start date is accepted and displayed in the start date text field and the Absolute Start Time field.	Date = <year>/<day of the year>		4/21/97
2.123	EOC(User	Enter the start time for the	The new start time is	Time =		4/21/97

Step ID	Station	Actions	Results	Comments	Verified Reqs.	Last Modified
	Station)	historical telemetry data.Type 04:42:23 <Return>	accepted and displayed in the start time text field and the Absolute Start Time field.	<hrs><mins><secs>(e.g., 17:44:32)		
2.124	EOC(User Station)	Enter the stop date for the historical telemetry data.Type 1997/035 <Return>	The new stop date is accepted and displayed in the stop date text field and the Absolute Stop Time field.	Date = <year>/<day of the year>		4/21/97
2.125	EOC(User Station)	Enter the stop time for the historical telemetry data.Type 04:45:34 <Return>	The new stop time is accepted and displayed in the stop time text field and the Absolute Stop Time field.	Time = <hrs><mins><secs>(e.g., 17:44:32)		4/21/97
2.126		Accept pair time.Click on the OK push button.	This pair time is now selected and displayed in the Selected Times table on the Analysis_Request_Builder screen.			4/21/97
2.127	~	Select parameters and specify their sampling and statistics rates using the Analysis Telemetry Selector tool.				4/21/97
2.128	EOC(User Station)	Select SDU_SCTIME with the sampling rate set to the Changes Only and no statistic generation (statistics option	The parameter mnemonic, SDU_SCTIME, and its sampling rate are displayed in the Selected Parameters table on the Analysis			4/21/97

Step ID	Station	Actions	Results	Comments	Verified Reqs.	Last Modified
		deselected).	Telemetry Selector screen.			
2.129	EOC(User Station)	Select SDU_PCKT_APID with the sampling rate set to the Changes Only and no statistic generation (statistics option deselected).	The parameter mnemonic, SDU_PCKT_APID, and its sampling rate are displayed in the Selected Parameters table on the Analysis Telemetry Selector screen.			4/21/97
2.130	EOC(User Station)	Select SDU_PACKET_SEQ with the sampling rate set to the Changes Only and no statistic generation (statistics option deselected).	The parameter mnemonic, SDU_PACKET_SEQ, and its sampling rate are displayed in the Selected Parameters table on the Analysis Telemetry Selector screen.			4/21/97
2.131	EOC(User Station)	Select SDU_PACKET_LENGTH with the sampling rate set to the Changes Only and no statistic generation (statistics option deselected).	The parameter mnemonic, SDU_PACKET_LENGTH , and its sampling rate are displayed in the Selected Parameters table on the Analysis Telemetry Selector screen.			4/21/97
2.132	EOC(User Station)	Select MIS_IR_CAMERA_AN28 V with the sampling rate set to the All Data and a statistics rate of 30 seconds.	The parameter mnemonic, MIS_IR_CAMERA_AN28 V, and its sampling and statistics rates are displayed in the Selected Parameters table on the Analysis Telemetry Selector screen.			4/21/97
2.133	EOC(User Station)	Select MIS_IR_CAMERA_BA28	The parameter mnemonic, MIS_IR_CAMERA_BA28			4/21/97

Step ID	Station	Actions	Results	Comments	Verified Reqs.	Last Modified
		V with the sampling rate set to the All Data and a statistics rate of 30 seconds.	V, and its sampling and statistics rates are displayed in the Selected Parameters table on the Analysis Telemetry Selector screen.			
2.134	EOC(User Station)	Select MIS_IR_CAMERA_DA28 V with the sampling rate set to the All Data and a statistics rate of 30 seconds.	The parameter mnemonic, MIS_IR_CAMERA_DA28 V, and its sampling and statistics rates are displayed in the Selected Parameters table on the Analysis Telemetry Selector screen.			4/21/97
2.135	EOC(User Station)	Deselect the parameter mnemonics (MIS_IR_CAMERA_AN28V, MIS_IR_CAMERA_BA28 V, MIS_IR_CAMERA_DA28 V) in the Available Parameters listbox on the Analysis Telemetry Selector screen.	The selected parameter mnemonics, (MIS_IR_CAMERA_AN28V, MIS_IR_CAMERA_BA28 V, MIS_IR_CAMERA_DA28 V), are no longer highlighted.			4/21/97
2.136	EOC(User Station)	Deselect the subsystem path AM1_MIS_I in the Subsystems listbox on the Analysis Telemetry Selector screen.	The radio button for the AM1_MIS_I subsystem path is no longer sensitized and the available parameters list is empty.			4/21/97
2.137	EOC(User Station)	Click on the OK push button to accept the	The Analysis Telemetry Selector window closes.			4/21/97

Step ID	Station	Actions	Results	Comments	Verified Reqs.	Last Modified
		selected parameter(s) with their sampling and statistics rates for the AR1c analysis request.	The selected parameter(s) with their sampling and statistics rates are displayed in the Selected Telemetry table on the Analysis_Request_Builder screen.			
2.138	EOC(User Station)	Enter /fos/test/am1/datasets/AR_1c in the Output DataSet Name field. Click on the toggle button next to the field to enable the writing of the results to the file named AR_1c.data.	The toggle button is sensitized and the name /fos/test/am1/datasets/AR_1c is displayed in the Output DataSet Name field.	The output data set name that is entered does not include the ".data" extension. The ".data" extension is added upon dataset generation.		4/21/97
2.139	EOC(User Station)	Save this request by selecting Save from the File pull-down menu located on the top menu bar of the Analysis_Request_Builder.	A message stating that the analysis request named AR1c is successfully saved is displayed in a pop-up notification window.			4/21/97
2.140	EOC(User Station)	Open AR1b. Rename it AR2b using the Save As option under the File pull-down menu located on the top menu bar of the Analysis_Request_Builder.	AR1b request contents is displayed. You receive a message that the request AR2b has been saved.			4/21/97
2.141	EOC(User Station)	Enter AR2b in the Request Name field.	AR2b appears in the Request Name text field.			4/21/97
2.142	EOC(User Station)	Select the EOC Only radio button under the Request	The EOC Only radio button is sensitized.	Data will be processed using the R/T Server		4/21/97

Step ID	Station	Actions	Results	Comments	Verified Reqs.	Last Modified
		Processing Site label on the Analysis_Request_Builder screen.		resources.		
2.143	EOC(User Station)	Select the Good Data radio button under the Data Quality label on the Analysis_Request_Builder screen.	The Good Data radio button is sensitized.			4/21/97
2.144	EOC(User Station)	Enter /fos/test/am1/datasets/AR_2b in the Output DataSet Name field. Click on the toggle button next to the field to enable the writing of the results to the file named AR_2b.data.	The toggle button is sensitized and the name /fos/test/am1/datasets/AR_2b is displayed in the Output DataSet Name field.	The output data set name that is entered does not include the ".data" extension. The ".data" extension is added upon dataset generation.		4/21/97
2.145	EOC(User Station)	Save AR2b using the Save option under the File pull-down menu located on the top menu bar of the Analysis_Request_Builder.	A message stating that the request AR2b has been saved is received.			4/21/97
2.146	EOC(User Station)	Open AR1b. Rename it AR3b using the Save As option under the File pull-down menu located on the top menu bar of the Analysis_Request_Builder.	AR1b request contents is displayed. You receive a message that the request AR3b has been saved.			4/21/97
2.147	EOC(User Station)	Enter AR3b in the Request Name field.	AR3b appears in the Request Name text field.			4/21/97
2.148	EOC(User	Select the Local Only radio	The Local Only radio	Data will be processed		4/21/97

Step ID	Station	Actions	Results	Comments	Verified Reqs.	Last Modified
	Station)	button under the Request Processing Site label on the Analysis_Request_Builder screen.	button is sensitized.	locally.		
2.149	EOC(User Station)	Select the Good Data radio button under the Data Quality label on the Analysis_Request_Builder screen.	The Good Data radio button is sensitized.			4/21/97
2.150	EOC(User Station)	Enter /fos/test/am1/datasets/AR_3b in the Output DataSet Name field. Click on the toggle button next to the field to enable the writing of the results to the file named AR_3b.data.	The toggle button is sensitized and the name /fos/test/am1/datasets/AR_3b is displayed in the Output DataSet Name field.	The output data set name that is entered does not include the ".data" extension. The ".data" extension is added upon dataset generation.		4/21/97
2.151	EOC(User Station)	Save AR3b using the Save option under the File pull-down menu located on the top menu bar of the Analysis_Request_Builder.	A message stating that the request AR3b has been saved is received.			4/21/97
2.152	EOC(User Station)	Select room Two from the SparcStation console.	The SparcStation console with the Two room button is sensitized.			4/21/97
2.153	EOC(User Station)	Access the Sybase repository directly to view and monitor the analysis request queue entries.In a terminal window, open a	All entries in the queue are sent to the screen. The following information is displayed:requestid Specific ID of the analysis	Release A: The user accesses the Sybase repository directly to view and monitor the queue entries.Release B: The		4/21/97

Step ID	Station	Actions	Results	Comments	Verified Reqs.	Last Modified
		script file by typing the following:script ~/eoc4/testfr1/eoc4.4/anlreq_statusLog into the Sybase server by entering (from the system prompt):sql (alias isql -Ufos_dba -Pfos_ dba)When in Sybase, enter:> use am1_fos_ops> goSelect all entries in the request queue:> select * from fos_request_queue> go Do not hit <Return>.	request status 0 = Pending, 1 = Active requesttime EOC time that the request was submitted (J2000) starttime Stop time of analysis request period (spacecraft J2000) stoptime Stop time of analysis request period (spacecraft J2000) username ID of user who submitted the requesthostname Node name of the machine from which request camefilename File name of the dataset to be generatedscid Spacecraft id; 0 = AM1, 1 = PM1percentcomp Percent completion of the request	Analysis monitoring capability will not be complete until Release B.		
2.154	EOC(User Station)	Select room One from the SparcStation console.	The SparcStation console with the One room button is sensitized.			4/21/97
2.155	EOC(User Station)	Open the analysis request AR1a by using the Open option on the File pull-down menu located on the	The AR1a analysis request form appears.			4/21/97

Step ID	Station	Actions	Results	Comments	Verified Reqs.	Last Modified
		top menu bar of the Analysis_Request_Builder.				
2.156	EOC(User Station)	Click on the OK push button in the Analysis_Request_Builder window to submit the request.	The Analysis_Request_Builder tool window closes. Event message(s)stating that the analysis request AR1a has been successfully submitted are displayed in the Event Display Window.	Event messages related to the creation of logical string(s) for the analysis request are displayed. Eventually, a notification that the Analysis Request AR1a has started is received.		4/21/97
2.157	EOC(User Station)	Invoke the Analysis_Request_Builder tool.Click on Tools button on the Control Window.Select Analysis_Request_Builder. Click on OK.	Analysis_Request_Builder screen appears.			4/21/97
2.158	EOC(User Station)	Open the analysis request AR1b by using the Open option on the File pull-down menu located on the top menu bar of the Analysis_Request_Builder.	The AR1b analysis request form appears.			4/21/97
2.159	EOC(User Station)	Click on the OK push button in the Analysis_Request_Builder window to submit the request.	The Analysis_Request_Builder tool window closes. Event message(s)stating that the analysis request AR1b has been successfully submitted are displayed in the Event	Event messages related to the creation of logical string(s) for the analysis request are displayed. Eventually, a notification that the Analysis Request AR1b has started is		4/21/97

Step ID	Station	Actions	Results	Comments	Verified Reqs.	Last Modified
			Display Window.	received.		
2.160	EOC(User Station)	Invoke the Analysis_Request_Builder tool.Click on Tools button on the Control Window.Select Analysis_Request_Builder. Click on OK.	Analysis_Request_Builder screen appears.			4/21/97
2.161	EOC(User Station)	Open the analysis request AR1c by using the Open option on the File pull-down menu located on the top menu bar of the Analysis_Request_Builder.	The AR1c analysis request form appears.			4/21/97
2.162	EOC(User Station)	Click on the OK push button in the Analysis_Request_Builder window to submit the request.	The Analysis_Request_Builder tool window closes. Event message(s)stating that the analysis request AR1c has been successfully submitted are displayed in the Event Display Window.	Event messages related to the creation of logical string(s) for the analysis request are displayed. Eventually, a notification that the Analysis Request AR1c has started is received.		4/21/97
2.163	EOC(User Station)	Invoke the Analysis_Request_Builder tool.Click on Tools button on the Control Window.Select Analysis_Request_Builder. Click on OK.	Analysis_Request_Builder screen appears.			4/21/97
2.164	EOC(User	Open the analysis request	The AR2b analysis request			4/21/97

Step ID	Station	Actions	Results	Comments	Verified Reqs.	Last Modified
	Station)	AR2b by using the Open option on the File pull-down menu located on the top menu bar of the Analysis_Request_Builder.	form appears.			
2.165	EOC(User Station)	Click on the OK push button in the Analysis_Request_Builder window to submit the request.	The Analysis_Request_Builder tool window closes. Event message(s)stating that the analysis request AR2b has been successfully submitted are displayed in the Event Display Window.	Event messages related to the creation of logical string(s) for the analysis request are displayed. Eventually, a notification that the Analysis Request AR2b has started is received.		4/21/97
2.166	EOC(User Station)	Invoke the Analysis_Request_Builder tool.Click on Tools button on the Control Window.Select Analysis_Request_Builder. Click on OK.	Analysis_Request_Builder screen appears.			4/21/97
2.167	EOC(User Station)	Open the analysis request AR3b by using the Open option on the File pull-down menu located on the top menu bar of the Analysis_Request_Builder.	The AR3b analysis request form appears.			4/21/97
2.168	EOC(User Station)	Click on the OK push button in the Analysis_Request_Builder window to submit the	The Analysis_Request_Builder tool window closes. Event message(s)stating that the	Event messages related to the creation of logical string(s) for the analysis request are displayed.		4/21/97

Step ID	Station	Actions	Results	Comments	Verified Reqs.	Last Modified
		request.	analysis request AR3b has been successfully submitted are displayed in the Event Display Window.	Eventually, a notification that the Analysis Request AR3b has started is received.		
2.169	EOC(User Station)	Select room Two from the SparcStation console.	The SparcStation console with the Two room button is sensitized.			4/21/97
2.170	EOC(User Station)	Return to the scripting window for the Sybase repository that allows viewing and monitoring of the analysis request queue entries. Type <Return> after the go command.	The Sybase query results are displayed and recorded in the scripting file, anlreq_status. The active analysis requests appear on the analysis queue entry list.	Eight analysis requests should be active. This correlates to AR1b, AR2b, and AR3b with two analysis time spans each (six analysis requests); AR1a and AR1c each have one analysis time span (two analysis requests).		4/21/97
2.171	EOC(User Station)	Produce a screen snapshot of the Sybase query results.snap (alias for 'xwd -root | xpr -device ps | lpr -dlw') orsnap3(alias for 'xwd -root | xpr -device ps | lpr -dlw -P fose3oe') orsnapframe3(alias for 'xwd -frame | xpr -device ljet -rv | lp -onb -s -d fose3oe')	Screen dump to a printer that contains a request queue list with eight analysis requests.	Release A: Generate a UNIX script to take a screen snapshot and send it to a printer, file, or both.Release B: Use the FUI Screen Snapshot feature to take a screen snapshot and send it to a printer, file, or both.		4/21/97
2.172	EOC(User Station)	Select room One from the SparcStation console.	The SparcStation console with the One room button is sensitized.			4/21/97

Step ID	Station	Actions	Results	Comments	Verified Reqs.	Last Modified
2.173	EOC(User Station)	Produce screen snapshots of the event messages in the Event Display window until half of the analysis requests have completed (at least four analysis requests).snap (alias for 'xwd -root | xpr -device ps | lpr -dlw') orsnap3(alias for 'xwd -root | xpr -device ps | lpr -dlw -P fose3oe') orsnapframe3(alias for 'xwd -frame | xpr -device ljet -rv | lp -onb -s -d fose3oe')	Screen dump to a printer that contains analysis related event messages (ANL, TLM, DMS, and RMS).	Release A: Generate a UNIX script to take a screen snapshot and send it to a printer, file, or both.Release B: Use the FUI Screen Snapshot feature to take a screen snapshot and send it to a printer, file, or both.		4/21/97
2.174	~	Snapshots of Sybase query results.		Steps 169-171 for taking snapshots of the Sybase queries can be repeated more than the two times specified in this test.		4/21/97
2.175	EOC(User Station)	Select room Two from the SparcStation console.	The SparcStation console with the Two room button is sensitized.			4/21/97
2.176	EOC(User Station)	Return to the scripting window for the Sybase repository that allows viewing and monitoring of the analysis request queue entries. Select all entries in the request queue:> select	The Sybase query results are displayed and recorded in the scripting file, anlreq_status. The active analysis requests appear on the analysis queue entry list.	This return to Sybase is due to the completion of half of the analysis requests (at least four analysis requests) - event notifications received.		4/21/97

Step ID	Station	Actions	Results	Comments	Verified Reqs.	Last Modified
		* from fos_request_queue> go				
2.177	EOC(User Station)	Produce a screen snapshot of the Sybase query results.snap (alias for 'xwd -root | xpr -device ps | lpr -dlw') orsnap3(alias for 'xwd -root | xpr -device ps | lpr -dlw -P fose3oe') orsnapframe3(alias for 'xwd -frame | xpr -device ljet -rv | lp -onb -s -d fose3oe')	Screen dump to a printer that contains a request queue list with four or less analysis requests.	Release A: Generate a UNIX script to take a screen snapshot and send it to a printer, file, or both.Release B: Use the FUI Screen Snapshot feature to take a screen snapshot and send it to a printer, file, or both.		4/21/97
2.178	~	Snapshots of the analysis related event messages displayed in the Event Display window.		Steps 173-174 for taking snapshots of the analysis related event messages can be repeated more than the two times specified in this test.		4/21/97
2.179	EOC(User Station)	Select room One from the SparcStation console.	The SparcStation console with the One room button is sensitized.			4/21/97
2.180	EOC(User Station)	Produce screen snapshots of the event messages in the Event Display window until all of the analysis requests have completed.snap (alias for 'xwd -root | xpr -device ps | lpr -dlw')	Screen dump to a printer that contains analysis related event messages (ANL, TLM, DMS, and RMS).	Release A: Generate a UNIX script to take a screen snapshot and send it to a printer, file, or both.Release B: Use the FUI Screen Snapshot feature to take a screen snapshot and send it to a		4/21/97

Step ID	Station	Actions	Results	Comments	Verified Reqs.	Last Modified
		orsnap3(alias for 'xwd -root | xpr -device ps | lpr -dlw -P fose3oe') orsnapframe3(alias for 'xwd -frame | xpr -device ljet -rv | lp -onb -s -d fose3oe')		printer, file, or both.		
2.181	~	Snapshots of Sybase query results.				4/21/97
2.182	EOC(User Station)	Select room Two from the SparcStation console.	The SparcStation console with the Two room button is sensitized.			4/21/97
2.183	EOC(User Station)	Return to the scripting window for the Sybase repository that allows viewing and monitoring of the analysis request queue entries. Select all entries in the request queue:> select * from fos_request_queue> go	The Sybase query results are displayed and recorded in the scripting file, anlreq_status. The active analysis requests appear on the analysis queue entry list.	This return to Sybase is due to the completion of all of the analysis requests - event notifications received.		4/21/97
2.184	EOC(User Station)	Produce a screen snapshot of the Sybase query results.snap (alias for 'xwd -root | xpr -device ps | lpr -dlw') orsnap3(alias for 'xwd -root | xpr -device ps | lpr -dlw -P fose3oe') orsnapframe3(alias for 'xwd -frame | xpr -device ljet -rv	Screen dump to a printer that contains an empty request queue list.	Release A: Generate a UNIX script to take a screen snapshot and send it to a printer, file, or both.Release B: Use the FUI Screen Snapshot feature to take a screen snapshot and send it to a printer, file, or both.		4/21/97

Step ID	Station	Actions	Results	Comments	Verified Reqs.	Last Modified
		| lp -onb -s -d fose3oe')				
2.185	EOC(User Station)	Return to the scripting window for the Sybase repository that allows viewing and monitoring of the analysis request queue entries. Terminate the Sybase query session :> quit	The Sybase prompt '>' disappears and the UNIX User Station prompt appears.			4/21/97
2.186	EOC(User Station)	Close the script file, anlreq_status, by typing the following in the scripting terminal window: CTRL-D.	A message is displayed that informs you of the closure of the script file.			4/21/97
2.187	EOC(User Station)	Select room Three from the SparcStation console.	The SparcStation console with the Three room button is sensitized.			4/21/97
2.188	~	Generate metadata content displays and save them to a file.				4/21/97
2.189	EOC(User Station)	In a new terminal window, type the following:script ~/eoc4/testfr1/eoc4.4/AR_metadatatest (alias for cd /fos/test/am1/scripts/setup) setenv SCRIPT UserStationsource FosEnvVarscd /fos/test/am1/bin/sun_sparc_5-4 FaDrReaderDriverType the	The FaDrReaderDriver prompt appears.Metadata for dataset filename is accepted.Metadata for dataset is displayed.The FaDrReaderDriver prompt goes away and the UNIX prompt appears.The FaDrReaderDriver prompt appears.Metadata for statistics dataset filename is			4/21/97

Step ID	Station	Actions	Results	Comments	Verified Reqs.	Last Modified
		following at the FaDrReaderDriver prompts:/fos/test/am1/datasets/AR_1a18Reinvoke FaDrReaderDriver.FaDrReaderDriver Type the following at the FaDrReaderDriver prompts:/fos/test/am1/datasets/AR_1a.stats18Reinvoke FaDrReaderDriver.FaDrReaderDriver Type the following at the FaDrReaderDriver prompts:/fos/test/am1/datasets/AR_1b18Reinvoke FaDrReaderDriver.FaDrReaderDriverType the following at the FaDrReaderDriver prompts:/fos/test/am1/datasets/AR_1b.stats18Reinvoke FaDrReaderDriver.FaDrReaderDriverType the following at the FaDrReaderDriver prompts:/fos/test/am1/datasets/AR_1c18Reinvoke FaDrReaderDriver.FaDrReaderDriverType the	accepted.Metadata for statistics dataset is displayed.The FaDrReaderDriver prompt goes away and the UNIX prompt appears.A message is displayed which informs you that the script file is saved.			

Step ID	Station	Actions	Results	Comments	Verified Reqs.	Last Modified
		following at the FaDrReaderDriver prompts:/fos/test/am1/datasets/AR_1c.stats18Reinvoke FaDrReaderDriver.FaDrReaderDriverType the following at the FaDrReaderDriver prompts:/fos/test/am1/datasets/AR_2b18Reinvoke FaDrReaderDriver.FaDrReaderDriverType the following at the FaDrReaderDriver prompts:/fos/test/am1/datasets/AR_2b.stats18Reinvoke FaDrReaderDriver.FaDrReaderDriverType the following at the FaDrReaderDriver prompts:/fos/test/am1/datasets/AR_3b18Reinvoke FaDrReaderDriver.FaDrReaderDriverType the following at the FaDrReaderDriver prompts:/fos/test/am1/datasets/AR_3b.stats18Save the script file by typing the following:CTRL-D				

Step ID	Station	Actions	Results	Comments	Verified Reqs.	Last Modified
2.190	~	Generate carry-out data files, and statistical reports.				4/21/97
2.191	EOC(User Station)	In a new terminal window, type the following:script ~/eoc4/testfr1/eoc4.4/AR_genlogcd /fos/test/am1/scripts/setupsetenv SCRIPT UserStationsource FosEnvVarscd /fos/test/am1/bin/sun_sparc_5-4 FaDrReaderDriverType the following at the FaDrReaderDriver prompts:/fos/test/am1/datasets/AR_1a68Reinvoke FaDrReaderDriver.FaDrReaderDriver Type the following at the FaDrReaderDriver prompts:/fos/test/am1/datasets/AR_1a.stats78Reinvoke FaDrReaderDriver.FaDrReaderDriver Type the following at the FaDrReaderDriver prompts:/fos/test/am1/datasets/AR_1b68Reinvoke FaDrReaderDriver.FaDrRe	The FaDrReaderDriver prompt appears.Dataset filename is accepted.Carryout file is created.The FaDrReaderDriver prompt goes away and the UNIX prompt appears.The FaDrReaderDriver prompt appears.Statistical dataset filename is accepted.Statistical report is created.The FaDrReaderDriver prompt goes away and the UNIX prompt appears.A message is displayed which informs you that the script file is saved.			4/21/97

Step ID	Station	Actions	Results	Comments	Verified Reqs.	Last Modified
		aderDriverType the following at the FaDrReaderDriver prompts:/fos/test/am1/datasets/AR_1b.stats78Reinvoke FaDrReaderDriver.FaDrReaderDriverType the following at the FaDrReaderDriver prompts:/fos/test/am1/datasets/AR_1c68Reinvoke FaDrReaderDriver.FaDrReaderDriverType the following at the FaDrReaderDriver prompts:/fos/test/am1/datasets/AR_1c.stats78Reinvoke FaDrReaderDriver.FaDrReaderDriverType the following at the FaDrReaderDriver prompts:/fos/test/am1/datasets/AR_2b68Reinvoke FaDrReaderDriver.FaDrReaderDriverType the following at the FaDrReaderDriver prompts:/fos/test/am1/datasets/AR_2b.stats78Reinvoke FaDrReaderDriver.FaDrRe				

Step ID	Station	Actions	Results	Comments	Verified Reqs.	Last Modified
		aderDriverType the following at the FaDrReaderDriver prompts:/fos/test/am1/datasets/AR_3b68Reinvoke FaDrReaderDriver.FaDrReaderDriverType the following at the FaDrReaderDriver prompts:/fos/test/am1/datasets/AR_3b.stats78Save the script file by typing the following:CTRL-D				
2.192	EOC(User Station)	Select room One from the SparcStation console.	The SparcStation console with the One room button is sensitized.			4/21/97
2.193	~	Perform post-test analysis, verify the following:The dataset product, carry-out file, contains the following information: FOS and AM-1 PDB parameter IDs; values (raw, EU converted, or decoded); data type (real, integer, or string); quality status indicator; out of limits indicator (red and yellow high,/low, or delta); conversion error indicator; and invalid mnemonic and				4/21/97

Step ID	Station	Actions	Results	Comments	Verified Reqs.	Last Modified
		EU conversion indicators.The number of samples listed for each parameter matches the number of available selections in the time frame.Each mnemonic contains a spacecraft time for each occurrence.The time tag includes year, day, hour, minute, second, and millisecond.Statistical reports contain the correct min-mean-max and standard deviation values, and time/duration of limit violations (if applicable).The metadata is correct.				
3.001	EOC (User Station)	Save the Event_Display data in the test run directory. In Event_Display menu:Select File.Select Save As.Change the filter directory to the file destination directory.Enter <event log filename>	A message is displayed which states that the event display contents have been saved in the entered <event log filename>.	Make sure that the event log filename includes the test name and the current date.		4/21/97
3.002	EOC (User	Bring down User Stations. In the UNIX window	A series of messages stating that FOS processes			4/21/97

Step ID	Station	Actions	Results	Comments	Verified Reqs.	Last Modified
	Station)	where the User Stations were initiated, enter:MyKill	are being killed is displayed.All FUI windows have disappeared.FOS applications are shutdown			
3.003	EOC (User Station)	After the "MyKill", check for undesirable FOS processes. ps -aux	No undesirable FOS processes remain.			4/21/97
3.004	EOC (User Station)	Open any iconized processes, or pages that didn't close. Close the windows.Select Quit from the File menu or Select the Close button on the window dialog orUse whatever other clean close window option that exists.	All FUI windows have disappeared.			4/21/97
3.005	EOC (User Station)	Kill all undesirable processes - Processes with a /fos/test/am1/bin/... prefix and owner is not "root" (there may be others).If processes are still active use kill -9 "PID" for each undesirable process. Type ps -aux again to verify the removal of the undesired FOS processes.	The killed FOS processes are no longer on the process listing.	PID stands for process ID.Notes: The user may need to be logged in as the owner of the processes in order to kill them.		4/21/97
3.006	EOC(User Station)	Select room Two from the SparcStation console of the User Station where the	The Two room button is sensitized.			4/21/97

Step ID	Station	Actions	Results	Comments	Verified Reqs.	Last Modified
		Real-Time and Data Servers were initiated.				
3.007	EOC(User Station)	In a X-terminal window:Type netscape & <Return>Invoke the URL http://198.118.199.20/FosDbHome.html	The NETSCAPE window appears.The FOS Database Access Page appears.			4/21/97
3.008	EOC (User Station)	Verify no endpoints exist on the User Stations:Click on Nameserver Database.Click on Clear Form.In Entry Id field enter: "foseXoe".Click on Submit.	"Total matches = 0".Note: If any endpoints exist recheck for live processes/endpoints on the User Stations using ps -aux . They must all be removed/killed prior to system startup.	X corresponds to the User Station number and can have a value of 5, 8, 9, or 10.		4/21/97
3.009	EOC(Real-Time Server)	Bring down Real-Time Server (foseoc6). In the UNIX window where the Real-Time Server was initiated, enter: MyKill. Wait 1-5 minutes.	A series of messages stating that FOS processes are being killed is displayed.FOS applications are shutdown			4/21/97
3.010	EOC(Real-Time Server)	After the "MyKill", check for undesirable FOS processes. ps -ef	No undesirable FOS processes remain.			4/21/97
3.011	EOC(Real-Time Server)	Kill all undesirable processes - Processes with a /fos/test/am1/bin/ prefix and owner is not "root" (there may be others).If processes are still active	The killed FOS processes are no longer on the process listing.	PID stands for process ID.Notes: The user may need to be logged in as the owner of the processes in order to kill them.		4/21/97

Step ID	Station	Actions	Results	Comments	Verified Reqs.	Last Modified
		use kill -9 "PID" for each undesirable process. Type ps -ef again to verify the removal of the undesired FOS processes.				
3.012	EOC(Real -Time Server)	Verify no endpoints exist on Real-Time Server:Click on Back.Click on Nameserver Database.Click on Clear Form.In Entry Id field enter: foseoc6.Click on Submit.	"Total matches = 0".Note: If any endpoints exist recheck for live processes/endpoints on the Real-Time Server using ps -ef . They must all be removed/killed prior to system startup.			4/21/97
3.013	EOC(Data Server)	Bring down Data Server (foseoc7). In the UNIX window where the Data Server was initiated, enter:MyKill. Wait 1-5 minutes.	A series of messages stating that FOS processes are being killed is displayed.FOS applications are shutdown			4/21/97
3.014	EOC(Data Server)	After the "MyKill", check for undesirable processes. ps -ef	No undesirable FOS processes remain.			4/21/97
3.015	EOC(Data Server)	Kill all undesirable processes - Processes with a /fos/test/am1/bin/ prefix and owner is not "root" (there may be others).If processes are still active use kill -9 "PID" for each undesirable process. Type	The killed FOS processes are no longer on the process listing.	PID stands for process ID.Notes: The user may need to be logged in as the owner of the processes in order to kill them.		4/21/97

Step ID	Station	Actions	Results	Comments	Verified Reqs.	Last Modified
		ps -ef again to verify the removal of the undesired FOS processes.				
3.016	EOC(Data Server)	Verify no endpoints exist on Data Server:Click on Back.Click on Nameserver Database.Click on Clear Form.In Entry Id field enter: foseoc7.Click on Submit.	"Total matches = 0".Note: If any endpoints exist recheck for live processes/endpoints on the Data Server using ps -ef . They must all be removed/killed prior to next system startup.			4/21/97
3.017	EOC	Verify no endpoints exist on FOS:Click on Back.Click on Nameserver DatabaseClick on Clear FormClick on Submit.Exit Netscape.	"Total matches = 0".Note: If any endpoints exist recheck for live processes/endpoints on the User Work Stations, and the Real Time Server and Data Server using ps -aux and ps -ef, respectively. All processes must be removed/killed prior to system startup.Netscape window is no longer displayed.			4/21/97
3.018	EOC	End the remote login sessions.Type exit in the X-terminal windows where the Real-Time and Data Server processes were initiated.	The remote login sessions end and a message is displayed that reflects the session logouts. The UNIX prompts for foseoc6 and foseoc7 return to the			4/21/97

Step ID	Station	Actions	Results	Comments	Verified Reqs.	Last Modified
			regular User Station (foseXoe) prompt.			
3.019	EOC	Log off the EOC UNIX workstation(s).	UNIX login sessions end.			4/21/97
3.020	ETS (MPS)PDOS terminal	Execute the MPS shutdown script.Change to the directory where the MPS shutdown script resides and type CLEAR at the PDOS terminal prompt; then type lt at the same prompt.	All the MPS task processes are killed-- they no longer appear in the task process listing.	Release A: This step is not required.Release B: This step is required.		4/21/97
3.021	ETS (MPS)X-terminal	Exit the MPS main window.	The MPS main window disappears.	Release A: This step is not required.Release B: This step is required.		4/21/97
3.022	ETS (MPS)X-terminal	Logout of the ETS X-terminal used for the MPS GUI.	UNIX login session ends.	Release A: This step is not required.Release B: This step is required.		4/21/97
3.023	ETS (LRS)	Exit the LRS monitor window.	The LRS monitor window disappears.	LRS was not used, EDOS Version 2 was used instead.		4/21/97
3.024	ETS (LRS)	Close the ETS LRS Menu Controller window.	The ETS LRS Menu Controller window disappears.	LRS was not used, EDOS Version 2 was used instead.		4/21/97
3.025	ETS (LRS)	Logout of the ETS UNIX workstation used by the LRS.	UNIX login session ends.	LRS was not used, EDOS Version 2 was used instead.		4/21/97
4.001		Verify EOC-6010#A			EOC-6010#A	4/21/97
4.002		Verify EOC-6050#A			EOC-6050#A	4/21/97
4.003		Verify EOC-6070#A			EOC-	4/21/97

Step ID	Station	Actions	Results	Comments	Verified Reqs.	Last Modified
					6070#A	
4.004		Verify EOC-6100#A			EOC-6100#A	4/21/97
4.005		Verify EOC-7060#A			EOC-7060#A	4/21/97
4.006		Verify EOC-7120#A			EOC-7120#A	4/21/97

EOC4.8 Transfer, Archival, and Retrieval of Analysis Results

This test verifies that the EOC can store and retrieve analysis results (carry-out files and other analysis products) from the local EOC archive (short-term storage) and the GSFC DAAC (long-term storage). This test also verifies that carry-out files can be forwarded to the S/C Analysis System (SAS) and other appropriate recipients.

- The carry-out files are generated by the FOS Analysis Subsystem (FAS). They contain the following types of data: AM-1 S/C housekeeping data, AM-1 S/C health and safety data, and AM-1 diagnostic data, Network Control Center (NCC) operator data message (ODM) data, and EDOS Customer Operations and Data Accounting (CODA) message data.
- Carry-out files and other analysis products are stored and received from the local EOC archive (short-term storage) and the GSFC DAAC (long-term storage).
- The SAS receives the carry-out files, SSR trash buffer files, and standard analysis products for specialized mission analyses that are not supported by the FOS Analysis Subsystem.

A selected set of analysis products are provided via FUI displays and reports at the EOC.

<u>Verified Requirements:</u>
EOC-7060#A

Procedures:

Step ID	Station	Actions	Results	Comments	Verified Reqs.	Last Modified
1.001	EOC	Initialize the FOS EOC hardware. Refer to the FOS Operations Tool Manual for the ECS Project, Section 4.1.1, Hardware Initialization.	FOS EOC hardware: DEC RAID (no name), RAID Server (foseoc2), Data Server (foseoc7), Real-Time Server (foseoc6), and EOC User Stations (HP and Sun) are up and running.	RAID contains the users' home directories and the operational FOS software in /fos, which needs to be mounted by the other machines.The FOS EOC hardware is already initialized so this step is not performed - step skipped.		4/18/97
1.002	ETS (MPS)	Initialize the ETS MPS hardware (Power On).	ETS MPS hardware is up and running.	The ETS MPS hardware is already initialized so this step is not performed - step skipped.Release A: This step is not required.Release B: This step is required.		4/18/97
1.003	EDOS	Initialize the EDOS hardware.	EDOS hardware is up and running.	Release A: This step is not required.Release B: This step is required.		4/18/97
1.004	ETS(MPS)X-terminal	If the ets2 login window is not up, restart the server and select ets2.Login to the ETS X-terminal (UNIX OS). account: si_t <Return> password: [password] <Return>Bring-up the MPS Graphical User Interface (GUI).Type	The MPS Menu Controller appears with MPS and OMDSIM buttons.	Home directory: /usr/si_t/MPS executable directory: /usr/si_t/release/binRelease A: This step is not required.Release B: This step is required.		4/18/97

Step ID	Station	Actions	Results	Comments	Verified Reqs.	Last Modified
		ets_mps <Return>				
1.005	ETS (MPS)X-terminal	Select MPS Exec from the MPS Menu Controller Window.	The MPS main window appears	Release A: This step is not required.Release B: This step is required.		4/18/97
1.006	ETS(MPS)PDOS terminal	Reset the MVME177 card and bring-up the MPS software.Press the reset button for the MVME177 card.Login to the ETS PDOS terminal.Change to the directory where the MPS startup script resides.Option 1: Type gotosi (alias cd 10:/si_t/release1)Option 2: Type cd /ets/devType RUNACPT.	The following message is shown at the bottom of the PDOS terminal: TY_main ... waiting for messageA MPS ready message is shown in the event log window of the MPS main window.	The MVME 177 card and the PDOS terminal are in the back room.Use Option 2.Release A: This step is not required.Release B: This step is required.		4/18/97
1.007	ETS(MPS)X-terminal	Select S/C simulation mode for MPS.Select the Spacecraft radio button for Simulation Mode from the MPS main window.	The Spacecraft radio button is sensitized.	Release A: This step is not required.Release B: This step is required.		4/18/97
1.008	ETS(MPS)X-terminal	Select the PDB as the data source for the telemetry being generated by the MPS.Select the PDB radio button under Data Source from the MPS main window.	The PDB radio button is sensitized.	Release A: This step is not required.Release B: This step is required.		4/18/97
1.009	ETS(MPS	Set and record the S/C and	The Spacecraft Time and	Use the following Unix		4/18/97

Step ID	Station	Actions	Results	Comments	Verified Reqs.	Last Modified
	)X-terminal	UTC times to the GMT time provided at the EOC.Select Set Time from the Control pull-down menu in MPS main window and enter the GMT time values or accept the GMT times provided by ETS.	UTC displays on the MPS main window are updated.	command to help in defining GMT time: date -uTime Format: yy ddd hh mm ssThis step is optional.Release A: This step is not required.Release B: This step is required.		
1.010	EOC (Data & R/T Servers)	Start the Sybase servers on the Data Server and Real-Time Server.	Sybase server #1 has started on Data Server, "foseoc7". Sybase server #2 has started on Real-Time Server, "foseoc6".	The Sybase servers are already up and running so this step is not performed-step skipped.		4/18/97
1.011	EOC(User Station)	Login to an EOC User Station, "foseXoe" or "msseoc2". Enter ivvtest <Return> Enter [password] <Return>	The SparcStation console with the One room button is sensitized.	X is 5, 8, 9, or 10.		4/18/97
1.012	EOC(User Station)	Select room Two from the SparcStation console.	The Two room button is sensitized.			4/18/97
1.013	EOC(User Station)	In a X-terminal window:Type netscape & <Return>Check to see if any FOS process endpoints exist.Invoke the URL http://198.118.199.20/FosDbHome.htmlSelect Nameserver Database.Click on Clear Form.Click on Submit	The NETSCAPE window appears.The FOS Database Access Page appears.A message is displayed which states that 0 endpoints are found.			4/18/97

Step ID	Station	Actions	Results	Comments	Verified Reqs.	Last Modified
1.014	EOC(User Station)	Select room One from the SparcStation console.	The SparcStation console with the One room button is sensitized.			4/18/97
1.015	EOC(Data Server)	Start up the FOS software for the Data Server.In a X-terminal window, remotely login to the FOS Data Server, "foseoc7".Type rlogin foseoc7 <Return>Enter [password] <Return> at password prompt.Type ps -ef <Return>; look for FOS processes and delete them using the kill -9 [PID].Type test <Return> (alias for cd /fos/test/am1/scripts/setup) Type source A2_DataServerStartup <Return>	Fourteen FOS software processes are now running on the Data Server.The following messages are displayed: Successful installation of signal handler FqLqSigHand, and a repeating Waiting for activity.	The FOS software processes are the ODB and FOS subsystem processes.rlogin has a -l <username> option to specify the user or it defaults to the login account name.PID stands for process ID.Alias test will be used to change directory.		4/18/97
1.016	EOC(Real -Time Server)	Start up the FOS software for the Real-Time Server.In a X-terminal window, remotely login to the FOS Real-Time Server, "foseoc6".Type rlogin foseoc6 <Return>Enter [password] <Return> at password prompt.Type ps -	Thirty-four FOS software processes are now running on the Real-Time Server.R/T logical string 100 is created.The following messages are displayed: Creating a ptp coupler	The FOS software processes are the ODB and FOS subsystem processes.rlogin has a -l <username> option to specify the user or it defaults to the login account name PID stands for process ID.Alias test		4/18/97

Step ID	Station	Actions	Results	Comments	Verified Reqs.	Last Modified
		ef <Return>; look for FOS processes and delete them using the kill -9 [PID].Type test <Return> (alias for cd /fos/test/am1/scripts/setup) Type source A2_RealTimeServerStartup <Return>		will be used to change directory.		
1.017	EOC(User Station)	Select room Two from the SparcStation console.	The Two room button is sensitized.			4/18/97
1.018	EOC(User Station)	Check to see if 14 FOS process endpoints exist for the Data Server.Click on Back.Enter foseoc7 in the Entry Id field.Click on Submit.	A message is displayed which states that 14 endpoints are found.	If any active FOS processes are left from a previous session, kill them using the following command: kill -9 [process ID]		4/18/97
1.019	EOC(User Station)	Check to see if 34 FOS process endpoints exist for the R/T Server.Click on Back.Enter foseoc6 in the Entry Id field.Click on Submit.	A message is displayed which states that 34 endpoints are found.	If any active FOS processes are left from a previous session, kill them using the following command: kill -9 [process ID]		4/18/97
1.020	EOC(User Station)	Check to see if 0 FOS process endpoints exist for the User Station "foseXoe".Click on Back.Enter "foseXoe" in the Entry Id field.Click on Submit.Exit Netscape.	A message is displayed which states that 0 endpoints are found.Netscape window is no longer displayed.	If any active FOS processes are left from a previous session, kill them using the following command: kill -9 [process ID]		4/18/97

Step ID	Station	Actions	Results	Comments	Verified Reqs.	Last Modified
1.021	EOC(User Station)	Select room One from the SparcStation console.	The SparcStation console with the One room button is sensitized.			4/18/97
1.022	EOC(User Station)	Start up the FOS software for the User Station, "foseXoe".Login to the EOC User Station, "foseXoe" Enter ivvtest3 <Return> Enter [password] <Return>In a terminal window, type test <Return>(alias for cd /fos/test/am1/scripts/setup) Type source A2_UserStationStartup <Return>	The appropriate FOS software processes are now running on the EOC User Station.The following windows are displayed: Control Window , General Scheduler, EOS Timeline, Load Manager, Load Generator, BAP Definer, and Activity Definer.	The FOS software processes are the ODB and FOS subsystem processes.X is 5, 8, 9, or 10.Use two User Stations. A back-up station (User Station 2) is needed; the system is very unstable. User Station 1 is the initial primary station.		4/18/97
1.023	EOC (User Station)	Iconify the six Planning and Scheduling windows: General Scheduler, EOS Timeline, Load Manager, Load Generator, BAP Definer, and Activity Definer	The Planning and Scheduling windows are now icons.	Use the Mini_Ctrl window.		4/18/97
1.024	EOC (User Station)	Bring up the Event Display Window via the Tools Button on the Control Window.Click on Tools.Select Event_Display.Click on OK.Deselect TLM and	The Event Display Window appears.The event windows are configured to specification.	Make sure that Netscape is not up in any of the workstation rooms.		4/18/97

Step ID	Station	Actions	Results	Comments	Verified Reqs.	Last Modified
		bold DMS, RMS, and ANL for the Event_Display on User Station 1.Select all S/S and bold DMS, RMS, and ANL for the Event_Display on User Station 2.Click the GRAPH buttons on the event display windows to deselect the graph displays.				
1.025	EOC (User Station)	Enable telemetry data archiving.Archiving is automatically enabled.	An event message stating that telemetry archiving is enabled. The Release A message that is displayed in the R/T Server startup window is myTlmArchiveFlag: 1.	Release A: Archiving is already enabled.Release B: The ECL directive ARCHIVE will control the archiving modes: ARCHIVE TLM =ENABLE <tlm TYPE>		4/18/97
1.026	EOC (User Station)	In a terminal window, invoke the script that generates the Test Configuration Report.Type config (alias cd /home/ivvtest3/config)Type tconfig (alias /home/ivvtest3/scripts/tconfig.scr)Type mv testconfig test#Yr_config_eoc4.<date>	A file named test#Yr_config_eoc4.<date>, which contains the "As Run" Configuration details, is in the /home/ivvtest3/config directory.	A directory ~/config has already been created. Aliases config and tconfig have already been added to the ivvtest3 .cshrc.# is 1 thru 10.Y is d or f.		4/18/97
1.027	~	Record the system configuration on the	The "As Run" Configuration details are			4/18/97

Step ID	Station	Actions	Results	Comments	Verified Reqs.	Last Modified
		execution cover sheet.	recorded on the execution cover sheet.			
2.001	EOC(User Station)	Change to the directory where the analysis requests reside.cd /fos/test/AM1/data/FUI/requestspwd	The current working directory is /fos/test/AM1/data/FUI/requests.			4/18/97
2.002	EOC(User Station)	Verify that the analysis requests reside in that directory.ls -la A*	The following files are in the directory listing: AR1a AR1b AR1c AR2b AR3b			4/18/97
2.003	EOC(User Station)	Change to the directory where the analysis datasets, statistics datasets, and metadata files reside.cd /fos/test/am1/datasetspwd	The current working directory is /fos/test/am1/datasets.			4/18/97
2.004	EOC(User Station)	Verify that the analysis datasets, statistics datasets, and metadata files reside in that directory.ls -la A*	The following files are in the directory listing: AR_1a.data AR_1a.metadata AR_1a.stats.data AR_1a.stats.metadata AR_1b.data AR_1b.metadata AR_1b.stats.data AR_1b.stats.metadata AR_1c.data AR_1c.metadata AR_1c.stats.data AR_1c.stats.metadata			4/18/97

Step ID	Station	Actions	Results	Comments	Verified Reqs.	Last Modified
			AR_2b.data AR_2b.metadata AR_2b.stats.data AR_2b.stats.metadata AR_3b.data AR_3b.metadata AR_3b.stats.data AR_3b.stats.metadata			
3.001	EOC (User Station)	Save the Event_Display data in the test run directory. In Event_Display menu:Select File.Select Save As.Change the filter directory to the file destination directory.Enter <event log filename>	A message is displayed which states that the event display contents have been saved in the entered <event log filename>.	Make sure that the event log filename includes the test name and the current date.		4/18/97
3.002	EOC (User Station)	Bring down User Stations. In the UNIX window where the User Stations were initiated, enter:MyKill	A series of messages stating that FOS processes are being killed is displayed.All FUI windows have disappeared.FOS applications are shutdown			4/18/97
3.003	EOC (User Station)	After the "MyKill", check for undesirable FOS processes. ps -aux	No undesirable FOS processes remain.			4/18/97
3.004	EOC (User Station)	Open any iconized processes, or pages that didn't close. Close the windows.Select Quit from	All FUI windows have disappeared.			4/18/97

Step ID	Station	Actions	Results	Comments	Verified Reqs.	Last Modified
		the File menu or Select the Close button on the window dialog orUse whatever other clean close window option that exists.				
3.005	EOC (User Station)	Kill all undesirable processes - Processes with a /fos/test/am1/bin/... prefix and owner is not "root" (there may be others).If processes are still active use kill -9 "PID" for each undesirable process. Type ps -aux again to verify the removal of the undesired FOS processes.	The killed FOS processes are no longer on the process listing.	PID stands for process ID.Notes: The user may need to be logged in as the owner of the processes in order to kill them.		4/18/97
3.006	EOC(User Station)	Select room Two from the SparcStation console of the User Station where the Real-Time and Data Servers were initiated.	The Two room button is sensitized.			4/18/97
3.007	EOC(User Station)	In a X-terminal window:Type netscape & <Return>Invoke the URL http://198.118.199.20/FosDbHome.html	The NETSCAPE window appears.The FOS Database Access Page appears.			4/18/97
3.008	EOC (User Station)	Verify no endpoints exist on the User Stations:Click on Nameserver Database.Click on Clear	"Total matches = 0".Note: If any endpoints exist recheck for live processes/endpoints on the	X corresponds to the User Station number and can have a value of 5, 8, 9, or 10.		4/18/97

Step ID	Station	Actions	Results	Comments	Verified Reqs.	Last Modified
		Form.In Entry Id field enter: "foseXoe".Click on Submit.	User Stations using ps -aux . They must all be removed/killed prior to system startup.			
3.009	EOC(Real -Time Server)	Bring down Real-Time Server (foseoc6). In the UNIX window where the Real-Time Server was initiated, enter: MyKill. Wait 1-5 minutes.	A series of messages stating that FOS processes are being killed is displayed.FOS applications are shutdown			4/18/97
3.010	EOC(Real -Time Server)	After the "MyKill", check for undesirable FOS processes. ps -ef	No undesirable FOS processes remain.			4/18/97
3.011	EOC(Real -Time Server)	Kill all undesirable processes - Processes with a /fos/test/am1/bin/ prefix and owner is not "root" (there may be others).If processes are still active use kill -9 "PID" for each undesirable process. Type ps -ef again to verify the removal of the undesired FOS processes.	The killed FOS processes are no longer on the process listing.	PID stands for process ID.Notes: The user may need to be logged in as the owner of the processes in order to kill them.		4/18/97
3.012	EOC(Real -Time Server)	Verify no endpoints exist on Real-Time Server:Click on Back.Click on Nameserver Database.Click on Clear Form.In Entry Id field enter: foseoc6.Click	"Total matches = 0".Note: If any endpoints exist recheck for live processes/endpoints on the Real-Time Server using ps -ef . They must all be			4/18/97

Step ID	Station	Actions	Results	Comments	Verified Reqs.	Last Modified
		on Submit.	removed/killed prior to system startup.			
3.013	EOC(Data Server)	Bring down Data Server (foseoc7). In the UNIX window where the Data Server was initiated, enter:MyKill. Wait 1-5 minutes.	A series of messages stating that FOS processes are being killed is displayed.FOS applications are shutdown			4/18/97
3.014	EOC(Data Server)	After the "MyKill", check for undesirable processes. ps -ef	No undesirable FOS processes remain.			4/18/97
3.015	EOC(Data Server)	Kill all undesirable processes - Processes with a /fos/test/am1/bin/ prefix and owner is not "root" (there may be others).If processes are still active use kill -9 "PID" for each undesirable process. Type ps -ef again to verify the removal of the undesired FOS processes.	The killed FOS processes are no longer on the process listing.	PID stands for process ID.Notes: The user may need to be logged in as the owner of the processes in order to kill them.		4/18/97
3.016	EOC(Data Server)	Verify no endpoints exist on Data Server:Click on Back.Click on Nameserver Database.Click on Clear Form.In Entry Id field enter: foseoc7.Click on Submit.	"Total matches = 0".Note: If any endpoints exist recheck for live processes/endpoints on the Data Server using ps -ef . They must all be removed/killed prior to next system startup.			4/18/97

Step ID	Station	Actions	Results	Comments	Verified Reqs.	Last Modified
3.017	EOC	Verify no endpoints exist on FOS:Click on Back.Click on Nameserver DatabaseClick on Clear FormClick on Submit.Exit Netscape.	"Total matches = 0".Note: If any endpoints exist recheck for live processes/endpoints on the User Work Stations, and the Real Time Server and Data Server using ps -aux and ps -ef, respectively. All processes must be removed/killed prior to system startup.Netscape window is no longer displayed.			4/18/97
3.018	EOC	End the remote login sessions.Type exit in the X-terminal windows where the Real-Time and Data Server processes were initiated.	The remote login sessions end and a message is displayed that reflects the session logouts. The UNIX prompts for foseoc6 and foseoc7 return to the regular User Station (foseXoe) prompt.			4/18/97
3.019	EOC	Log off the EOC UNIX workstation(s).	UNIX login sessions end.			4/18/97
3.020	ETS (MPS)PDOS terminal	Execute the MPS shutdown script.Change to the directory where the MPS shutdown script resides and type CLEAR at the PDOS terminal prompt; then type lt at the same prompt.	All the MPS task processes are killed-- they no longer appear in the task process listing.	Release A: This step is not required.Release B: This step is required.		4/18/97

Step ID	Station	Actions	Results	Comments	Verified Reqs.	Last Modified
3.021	ETS (MPS)X-terminal	Exit the MPS main window.	The MPS main window disappears.	Release A: This step is not required.Release B: This step is required.		4/18/97
3.022	ETS (MPS)X-terminal	Logout of the ETS X-terminal used for the MPS GUI.	UNIX login session ends.	Release A: This step is not required.Release B: This step is required.		4/18/97
3.023	ETS (LRS)	Exit the LRS monitor window.	The LRS monitor window disappears.	LRS was not used, EDOS Version 2 was used instead.		4/18/97
3.024	ETS (LRS)	Close the ETS LRS Menu Controller window.	The ETS LRS Menu Controller window disappears.	LRS was not used, EDOS Version 2 was used instead.		4/18/97
3.025	ETS (LRS)	Logout of the ETS UNIX workstation used by the LRS.	UNIX login session ends.	LRS was not used, EDOS Version 2 was used instead.		4/18/97
4.001		Verify EOC-7060#A			EOC-7060#A	4/18/97